Title	L2_MAIN
Size A3	Document Number CONTENT
Rev	P0
Date:	Tuesday, October 19, 2021
Sheet	0 of 79

ANT1 LB

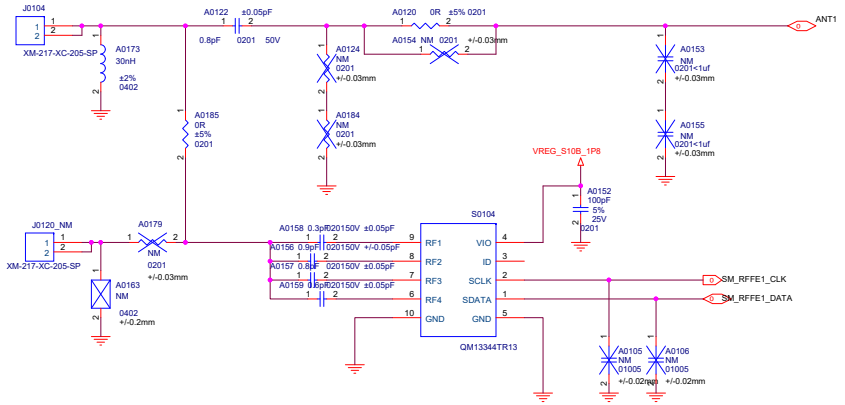

ANT4 MHB

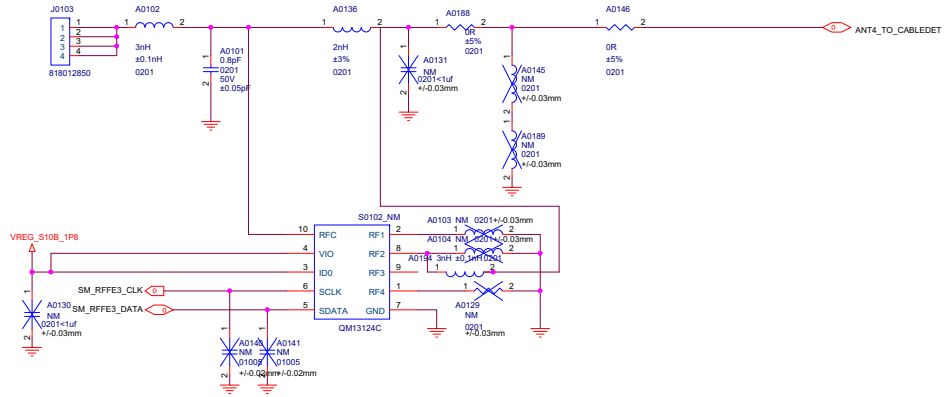

ANT5 MHB+B32

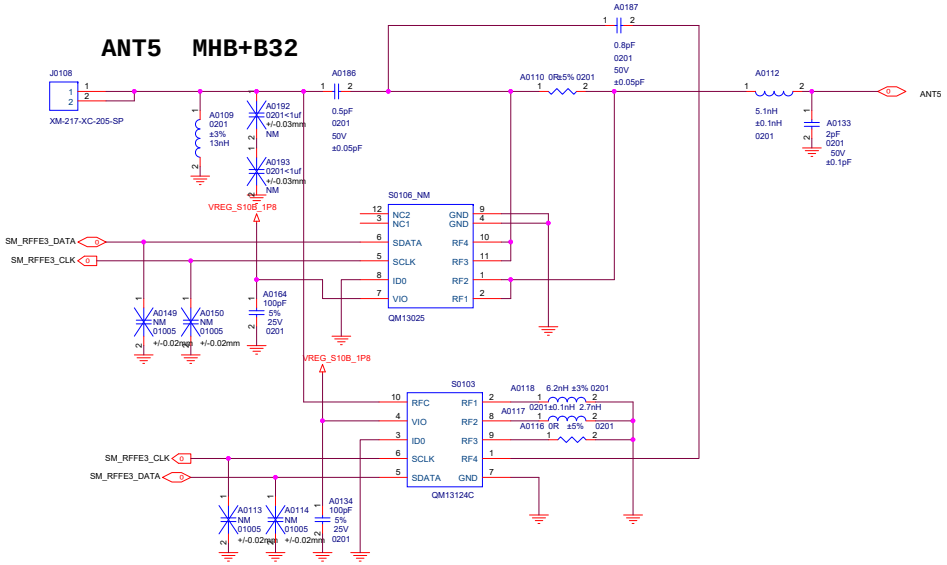

ANT10 N78+N79

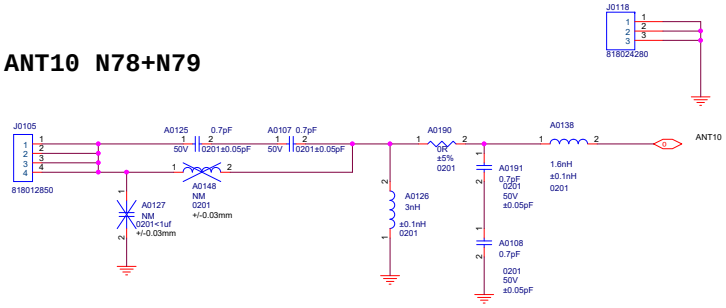

MAIN PCB GND

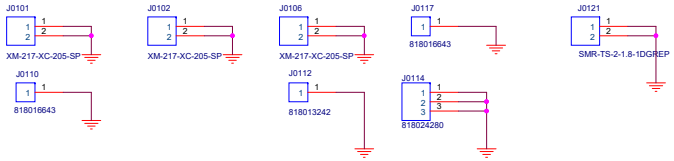

SAR SENSOR

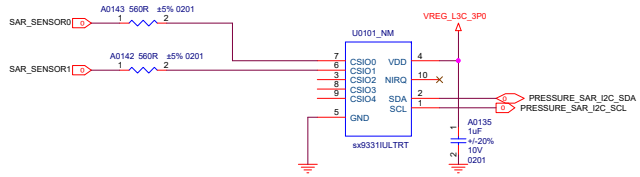

ANT11 N78/N79

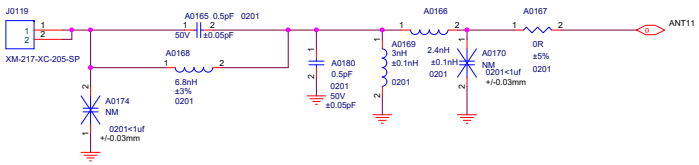

Title	L2_MAIN	
Size A2	Document Number ANT1	Rev P0
Date: Wednesday, October 20, 2021	Sheet	

ANT16 GPS L1+WIFI2.4 CHAIN0

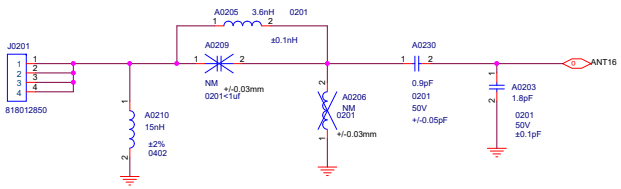

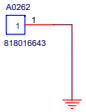

ANT18 WIFI2.4G+WIFI6E CHAIN1

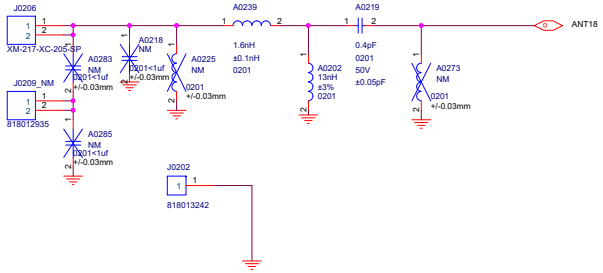

ANT19 GPS L5

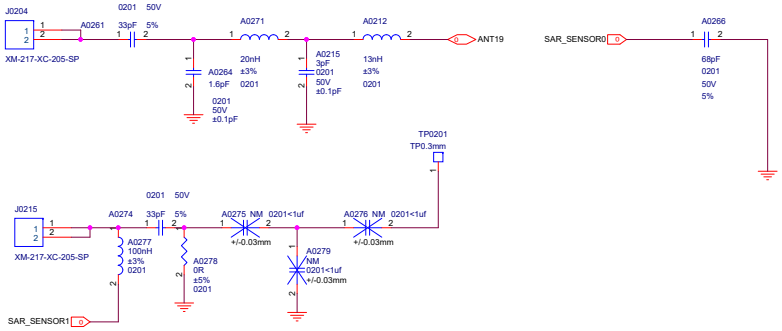

ANT2 LB(3)+B32

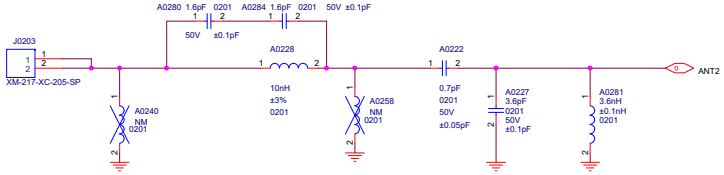

ANT17 WIFI 6E CHAIN0

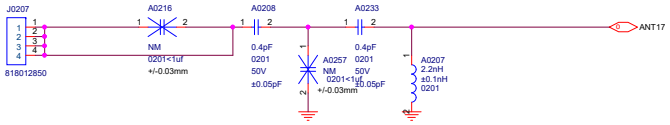

Title	L2_MAIN	
Size A2	Document Number ANT2	Rev P0
Date: Wednesday, October 20, 2021	Sheet 2	79

ANT0
GLB
MHB DM
LB TRX
n41 DRX
n1/n3/n7 DRX

CN
MHB_DM
LB_TRX
N1/N3/N41 SA DM
N28 SA PRX
N41 NSA DRX

ANT1
GLB
LB DRX
CN
LB DRX
N28 SA DRX

ANT2
GLB
B20+N28 DRX
B32 PRX
CN
N5 PRX2
N8 PRX2

ANT3
GLB
MHB TRX
n1/n3/n7 PM
N41 PM
CN
MHB TRX
N1/N3/N41 SA TRX

ANT4
GLB
MHB PM
n41 TRX
n1/n3/n7 TRX

CN
MHB PM
n41 NSA TRX
n1/n3/n41 SA PM
N41 SA TX1

C0306、C0307 为在位检测电路隔直电容

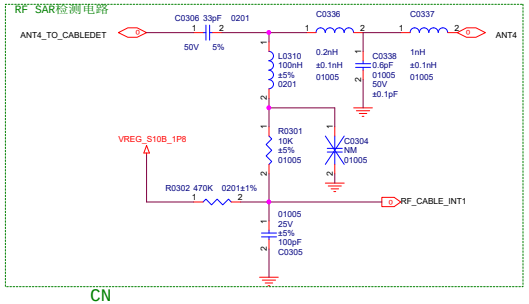

ANT5
GLB
MHB DRX
n41 DM
n1/n3/n7 DM
B32 DRX

CN
MHB DRX
n41 DM
n1/n3/n41 SA DRX
N41 NSA DM

ANT7(LDS)
GLB
B7 PRX IN ENDC B7_N41
CN
N41 NSA PM+

ANT10
n77/n78/n79 TRX

C0308、C0309 为在位检测电路隔直电容

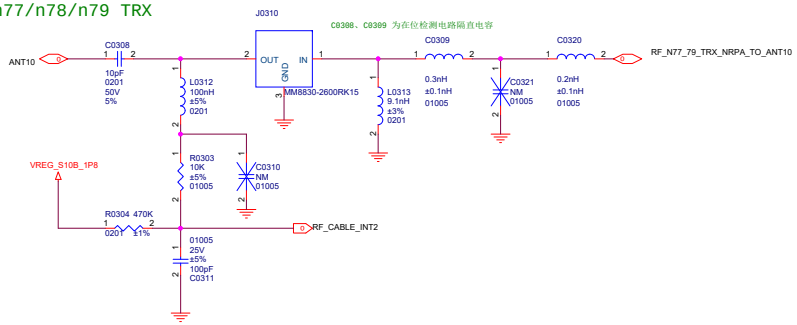

ANT11
N77/N78/N79 PM

ANT12
N77/N78/N79 DM

ANT13 n77/n78/n79 DRX

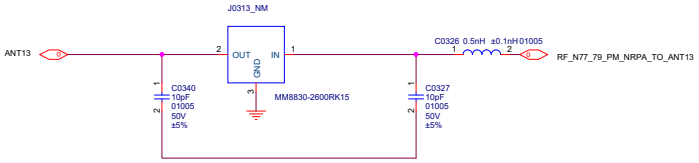

WIFI+GPS

ANT16 GPS L1+WIFI2.4 CHAIN0

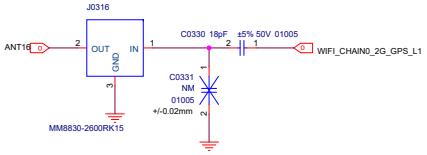

ANT17 WIFI 6E CHAIN0

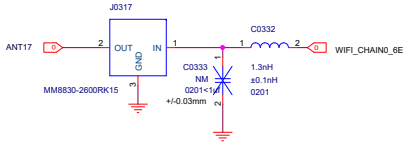

ANT18 WIFI2.4G+WIFI6E CHAIN1

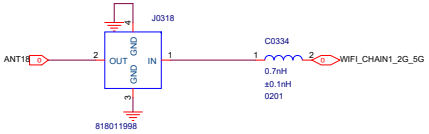

Title	L2_MAIN	
Size A2	Document Number RF CONN	Rev P0
Date: Wednesday, October 20, 2021	Sheet 3	79

Title	L2_MAIN		
Size A2	Document Number PRX		Rev P0
Date: Tuesday, October 19, 2021	Sheet 4	80	

Title	L2_MAIN
Size A2	Document Number DRX
Rev	P0
Date:	Tuesday, October 19, 2021
Sheet	

Title	L2_MAIN
Size A2	Document Number LB PA
Rev	P0
Date:	Tuesday, October 19, 2021
Sheet	

Title	L2_MAIN	
Size A2	Document Number MHB PA	Rev P0
Date: Tuesday, October 19, 2021	Sheet 7 of 80	

Title	L2_MAIN		
Size A2	Document Number ENDC PA		Rev P0
Date: Tuesday, October 19, 2021	Sheet 8 of 80		

QET7100_1

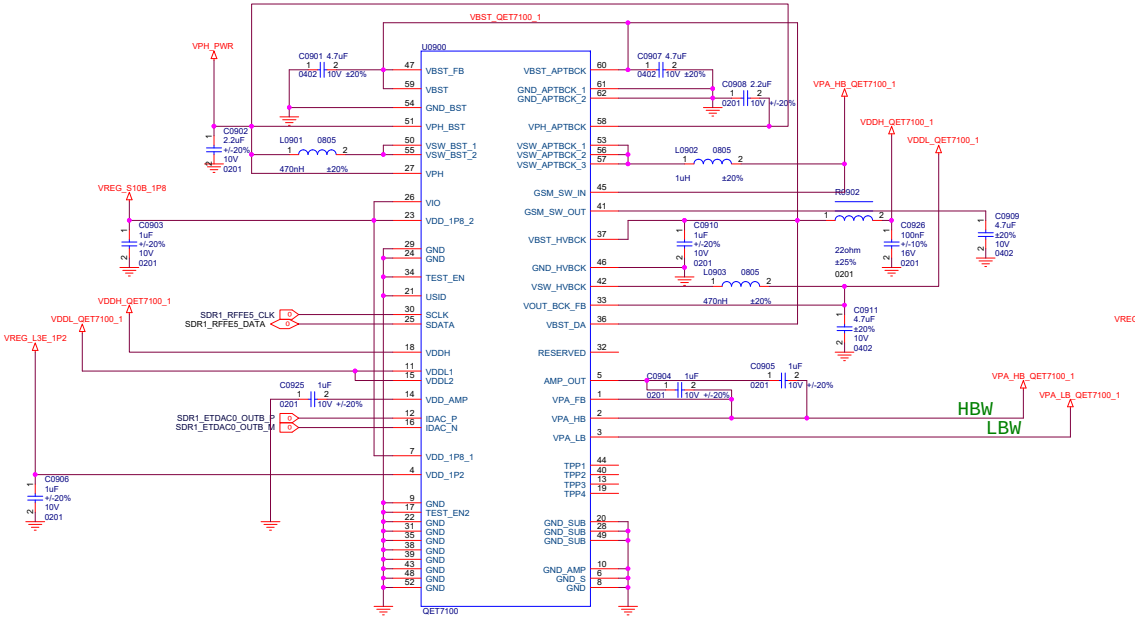

QET7100_2

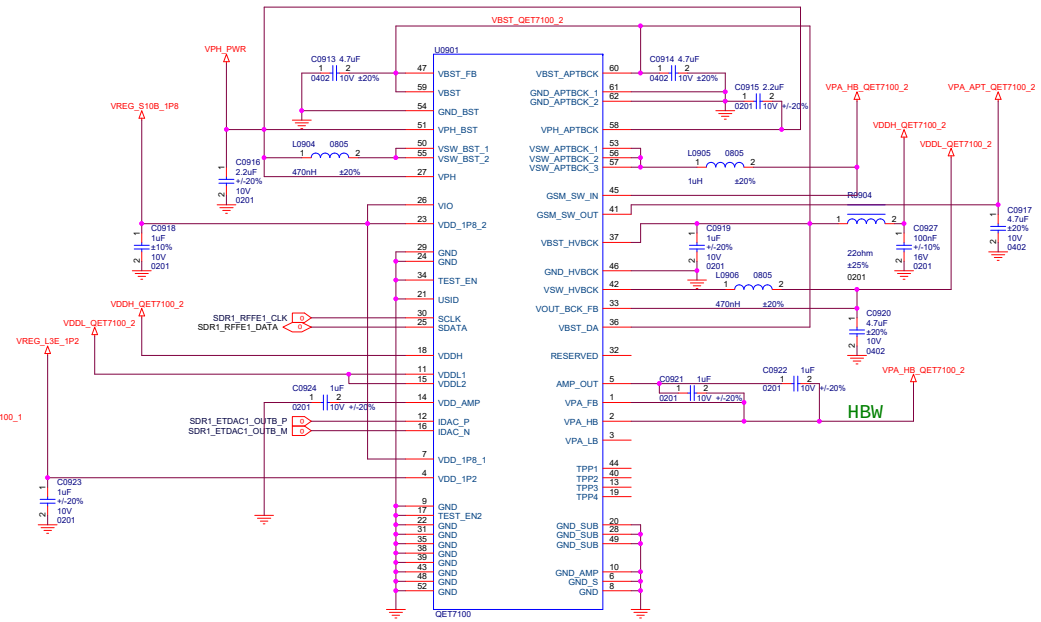

Title	L2_MAIN		
Size A2	Document Number RF DC-DC		Rev P0
Date: Tuesday, October 19, 2021		Sheet	

Title	L2_MAIN		
Size A2	Document Number PRX MIMO		Rev P0
Date: Tuesday, October 19, 2021		Sheet	

Title	L2_MAIN
Size A3	Document Number DRX MIMO
Rev	P0
Date:	Tuesday, October 19, 2021
Sheet	11 80

Title	L2_MAIN
Size A3	Document Number Reserved(for LNA)
Rev	P0
Date:	Tuesday, October 19, 2021
Sheet	

Title	L2_MAIN
Size A2	Document Number WTR SDM735-1
Rev	P0
Date:	Tuesday, October 19, 2021
Sheet	

Title	L2_MAIN	
Size A2	Document Number WTR SDM735-2	Rev P0
Date: Tuesday, October 19, 2021	Sheet	

Title	L2_MAIN
Size A3	Document Number Reserved(for WTR)
Rev	P0
Date:	Tuesday, October 19, 2021
Sheet	15 80

Title	L2_MAIN
Size A3	Document Number Reserved(for 5G-sub 6G)
Rev	P0
Date:	Tuesday, October 19, 2021
Sheet	16 80

Title	L2_MAIN	
Size A2	Document Number Reserved(for MM Wave)	Rev P0
Date: Tuesday, October 19, 2021	Sheet	

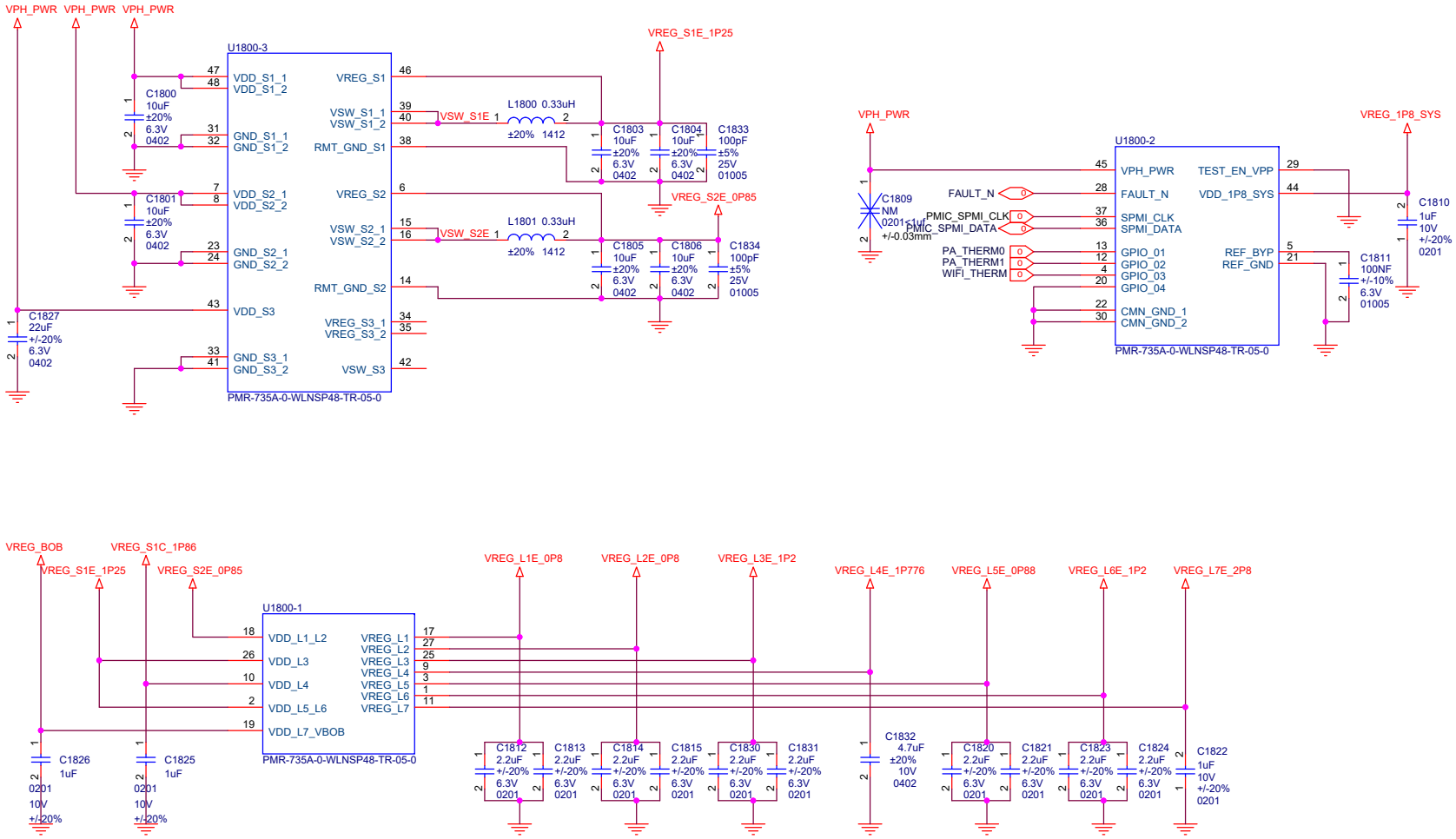

Title	L2_MAIN	
Size A3	Document Number PMR735A/PMR735B	Rev P0
Date: Wednesday, October 20, 2021	Sheet	

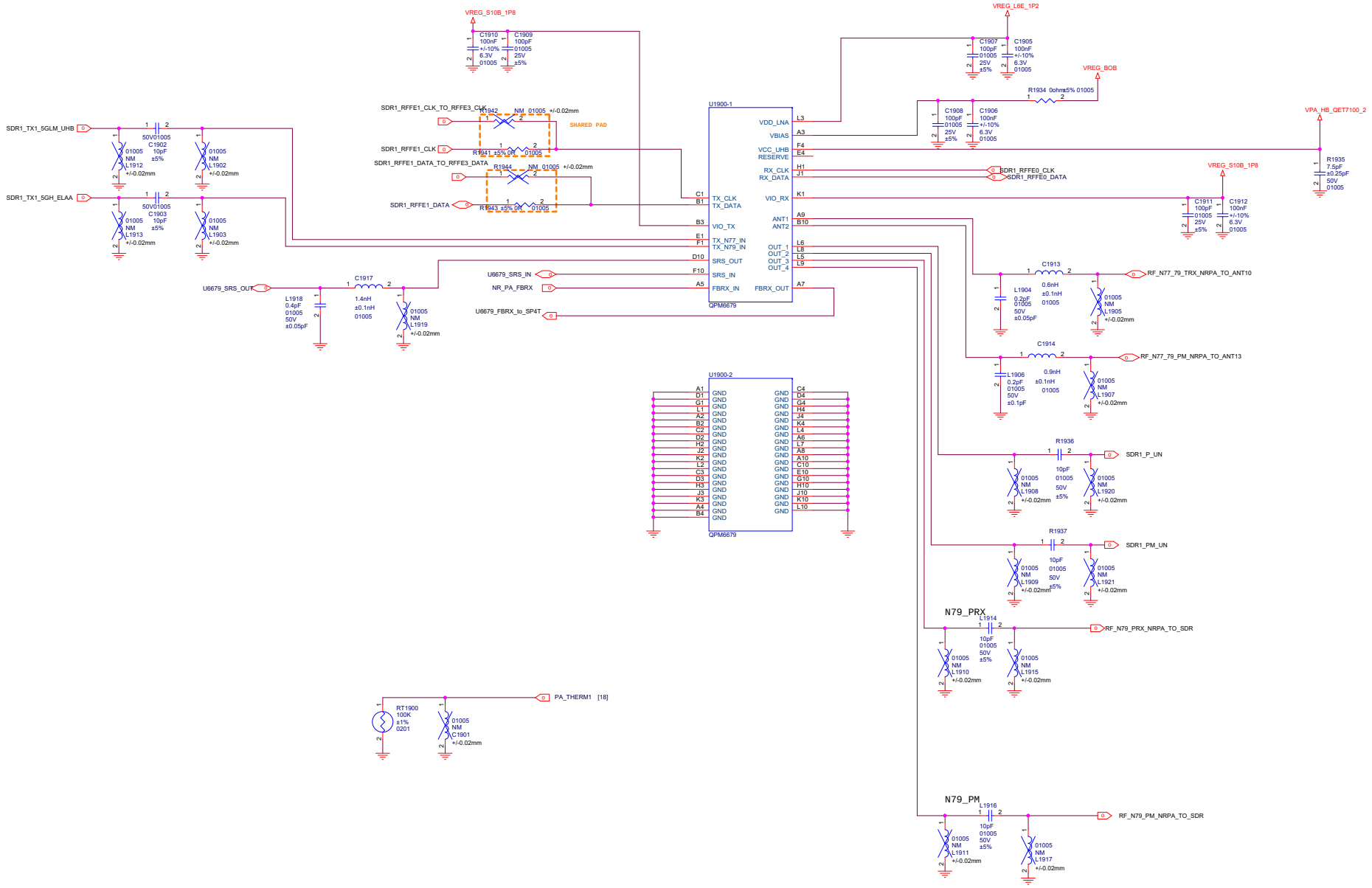

Title	L2_MAIN	
Size A2	Document Number 5G N77 N79	Rev P0
Date: Wednesday, October 20, 2021	Sheet	

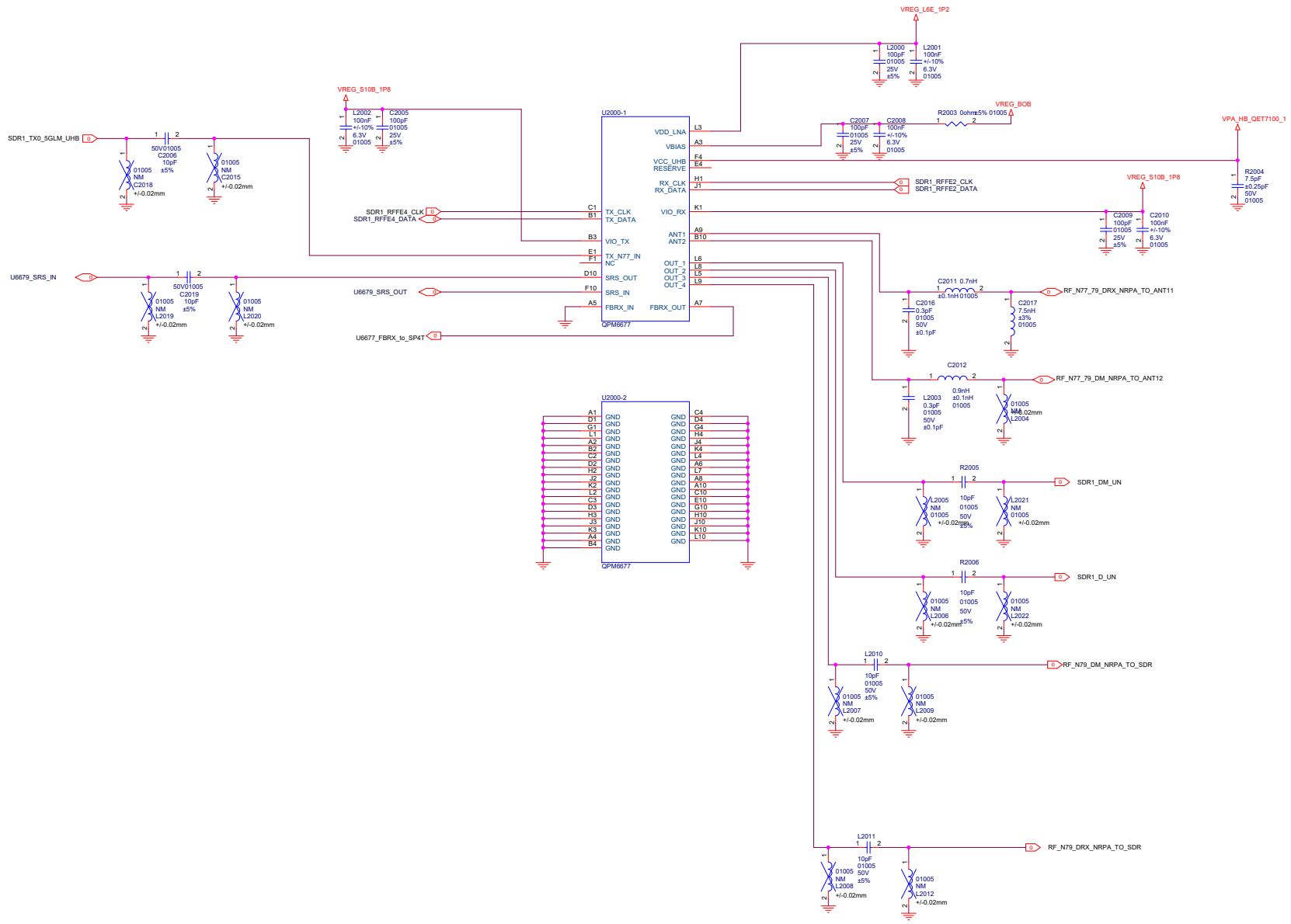

Title	L2_MAIN	
Size A2	Document Number 5G N77 N79 MIMO	Rev P0
Date: Wednesday, October 20, 2021	Sheet	

RF

735A

VREG_L4E_1P776
VREG_L1E_0P8
VREG_L2E_0P8
VREG_L5E_0P88
VREG_L6E_1P2

	PAD_CR0.4	TP10185
	PAD_CR0.4	TP10186
	PAD_CR0.4	TP11365
	PAD_CR0.4	TP11366
	PAD_CR0.4	TP11363
	PAD_CR0.4	TP11364
	PAD_CR0.4	TP10187
	PAD_CR0.4	TP10189
	PAD_CR0.4	TP10188
	PAD_CR0.4	TP10579
	PAD_CR0.4	TP10580
PA_THERM0	PAD_CR0.4	TP11339

DCDC

VPA_APT_QET7100_2
VPA_LB_QET7100_1

	PAD_CR0.4	TP10022
	PAD_CR0.4	TP10191
	PAD_CR0.4	TP10192
	PAD_CR0.4	TP10193
	PAD_CR0.4	TP10194
	PAD_CR0.4	TP10195
	PAD_CR0.4	TP10196
SDR1_RFFE5_CLK	PAD_CR0.4	TP10199
SDR1_RFFE5_DATA	PAD_CR0.4	TP10200
SDR1_ET0AC0_OUT8_P	PAD_CR0.4	TP10202
SDR1_ET0AC0_OUT8_M	PAD_CR0.4	TP10203
SDR1_RFFE1_CLK	PAD_CR0.4	TP10204
SDR1_RFFE1_DATA	PAD_CR0.4	TP10205
SDR1_ET0AC1_OUT8_P	PAD_CR0.4	TP10206
SDR1_ET0AC1_OUT8_M	PAD_CR0.4	TP10207

QPM6679

SDR1_RFFE0_CLK	PAD_CR0.4	TP10208
SDR1_RFFE0_DATA	PAD_CR0.4	TP10209
SDR1_TX1_5GLM_UHB	PAD_CR0.4	TP10210
SDR1_TX1_5GH_ELAN	PAD_CR0.4	TP10211
SDR1_P_UN	PAD_CR0.4	TP10212
SDR1_PM_UN	PAD_CR0.4	TP10213
RF_N79_PRX_NRPA_TO_SDR	PAD_CR0.4	TP10214
NR_PA_FBRX	PAD_CR0.4	TP10216
U8679_FBRX_to_SPMT	PAD_CR0.4	TP10217
RF_N79_PM_NRPA_TO_SDR	PAD_CR0.4	TP10581
ANT11	PAD_CR0.4	TP11497
RF_N77_79_DRX_NRPA_TO_ANT11	PAD_CR0.4	TP11498

QPM6677

SDR1_RFFE2_CLK	PAD_CR0.4	TP10218
SDR1_RFFE2_DATA	PAD_CR0.4	TP10219
SDR1_TX0_5GLM_UHB	PAD_CR0.4	TP10220
SDR1_DM_UN	PAD_CR0.4	TP10221
SDR1_D_UN	PAD_CR0.4	TP10222
RF_N79_DM_NRPA_TO_SDR	PAD_CR0.4	TP10223
RF_N79_DRX_NRPA_TO_SDR	PAD_CR0.4	TP10225
U8677_FBRX_to_SPMT	PAD_CR0.4	TP10227

SDR1

SDR1_XO_CLK	PAD_CR0.4	TP10228
SDR1_QLINK0_WMSS_RESET_N	PAD_CR0.4	TP10229
SM_RFFE4_CLK	PAD_CR0.4	TP10230
SM_RFFE4_DATA	PAD_CR0.4	TP10231
SDR1_QLINK0_REQ	PAD_CR0.4	TP10232
SDR1_QLINK0_EN	PAD_CR0.4	TP10233
SDR1_QLINK0_L2_M	PAD_CR0.4	TP10234
SDR1_QLINK0_L2_P	PAD_CR0.4	TP10235
SDR1_QLINK0_L3_M	PAD_CR0.4	TP10236
SDR1_QLINK0_L3_P	PAD_CR0.4	TP10237
SDR1_QLINK0_L4_M	PAD_CR0.4	TP10238
SDR1_QLINK0_L4_P	PAD_CR0.4	TP10239
SDR1_QLINK0_L0_M	PAD_CR0.4	TP10240
SDR1_QLINK0_L0_P	PAD_CR0.4	TP10241
SDR1_QLINK0_L1_M	PAD_CR0.4	TP10242
SDR1_QLINK0_L1_P	PAD_CR0.4	TP10243
SDR1_QLINK0_CLK_M	PAD_CR0.4	TP10244
SDR1_QLINK0_CLK_P	PAD_CR0.4	TP10245
SDR1_GRFC14	PAD_CR0.4	TP10289

SDR2

SDR2_XO_CLK	PAD_CR0.4	TP10248
SDR2_QLINK2_WMSS_RESET_N	PAD_CR0.4	TP10249
SDR2_QLINK2_REQ	PAD_CR0.4	TP10250
SDR2_QLINK2_EN	PAD_CR0.4	TP10253
SDR2_QLINK2_L0_P	PAD_CR0.4	TP10254
SDR2_QLINK2_L0_M	PAD_CR0.4	TP10255
SDR2_QLINK2_L1_P	PAD_CR0.4	TP10258
SDR2_QLINK2_L1_M	PAD_CR0.4	TP10259
SDR2_QLINK2_L2_M	PAD_CR0.4	TP10260
SDR2_QLINK2_L2_P	PAD_CR0.4	TP10261
SDR2_QLINK2_L3_P	PAD_CR0.4	TP10262
SDR2_QLINK2_L3_M	PAD_CR0.4	TP10263
SDR2_QLINK2_L4_P	PAD_CR0.4	TP10264
SDR2_QLINK2_L4_M	PAD_CR0.4	TP10265
SDR2_QLINK2_CLK_P	PAD_CR0.4	TP10706
SDR2_QLINK2_CLK_M	PAD_CR0.4	TP10707

PM

	PAD_CR0.4	TP10271
	PAD_CR0.4	TP10273
	PAD_CR0.4	TP10274
	PAD_CR0.4	TP10275
	PAD_CR0.4	TP10276
	PAD_CR0.4	TP10718
	PAD_CR0.4	TP11296
	PAD_CR0.4	TP10719

PMR735_GPIO

SW_GPIO

SM_GRFC10	PAD_CR0.4	TP10704
SM_GRFC11	PAD_CR0.4	TP11476

NFC

NFC_RF_P	PAD_CR0.4	TP10942
NFC_RF_N	PAD_CR0.4	TP10943

MIPI 兼容

[13] SM_GRFC12	PAD_CR0.4	TP11478
[13]SM_GRFC0_MIPA	PAD_CR0.4	TP11479
[13]SDR1_RFFE1_CLK_TO_RFFE3_CLK	PAD_CR0.4	TP11480
[13]SDR1_RFFE1_DATA_TO_RFFE3_DATA	PAD_CR0.4	TP11481
[13]SDR1_RFFE4_CLK	PAD_CR0.4	TP11482
[13]SDR1_RFFE4_DATA	PAD_CR0.4	TP11483

PAD_CR0.4	TP10291	
PAD_CR0.4	TP10292	
PAD_CR0.4	TP10293	
PAD_CR0.4	TP10294	
PAD_CR0.4	TP10295	
PAD_CR0.4	TP10296	
PAD_CR0.4	TP10297	
PAD_CR0.4	TP10298	
PAD_CR0.4	TP10299	
PAD_CR0.4	TP10300	
PAD_CR0.4	TP10301	
PAD_CR0.4	TP10302	
PAD_CR0.4	TP10303	
PAD_CR0.4	TP10304	
PAD_CR0.4	TP10305	
PAD_CR0.4	TP10306	
PAD_CR0.4	TP10307	
PAD_CR0.4	TP10308	
PAD_CR0.4	TP10309	
PAD_CR0.4	TP10310	
PAD_CR0.4	TP10311	
PAD_CR0.4	TP10312	
PAD_CR0.4	TP10313	
PAD_CR0.4	TP10314	
PAD_CR0.4	TP10315	
PAD_CR0.4	TP10316	
PAD_CR0.4	TP10317	
PAD_CR0.4	TP10318	
PAD_CR0.4	TP10319	
PAD_CR0.4	TP10320	
PAD_CR0.4	TP10321	
PAD_CR0.4	TP10322	
PAD_CR0.4	TP10323	
PAD_CR0.4	TP10324	
PAD_CR0.4	TP10325	
PAD_CR0.4	TP10326	
PAD_CR0.4	TP10327	
PAD_CR0.4	TP10328	
PAD_CR0.4	TP10329	
PAD_CR0.4	TP10330	
PAD_CR0.4	TP10331	
PAD_CR0.4	TP10332	
PAD_CR0.4	TP10333	
PAD_CR0.4	TP10334	
PAD_CR0.4	TP10335	
PAD_CR0.4	TP10336	
PAD_CR0.4	TP10337	
PAD_CR0.4	TP10338	
PAD_CR0.4	TP10339	
PAD_CR0.4	TP10340	
PAD_CR0.4	TP11299	
PAD_CR0.4	TP11300	
PAD_CR0.4	TP11301	
PAD_CR0.4	TP11302	
PAD_CR0.4	TP11303	
PAD_CR0.4	TP11304	
PAD_CR0.4	TP11305	
PAD_CR0.4	TP11306	
PAD_CR0.4	TP11307	
PAD_CR0.4	TP11308	
PAD_CR0.4	TP10341	
PAD_CR0.4	TP10342	
PAD_CR0.4	TP10343	
PAD_CR0.4	TP10344	
PAD_CR0.4	TP10345	
PAD_CR0.4	TP10346	
PAD_CR0.4	TP10347	
PAD_CR0.4	TP10348	
PAD_CR0.4	TP10349	
PAD_CR0.4	TP10350	
PAD_CR0.4	TP10351	
PAD_CR0.4	TP10352	
PAD_CR0.4	TP10353	
PAD_CR0.4	TP10354	
PAD_CR0.4	TP10355	
PAD_CR0.4	TP10356	
PAD_CR0.4	TP10357	
PAD_CR0.4	TP10358	
PAD_CR0.4	TP10359	
PAD_CR0.4	TP10360	
PAD_CR0.4	TP10361	
PAD_CR0.4	TP10362	
PAD_CR0.4	TP10363	
PAD_CR0.4	TP10364	
PAD_CR0.4	TP10365	
PAD_CR0.4	TP10366	
PAD_CR0.4	TP10367	
PAD_CR0.4	TP10368	
PAD_CR0.4	TP10369	
PAD_CR0.4	TP10370	
PAD_CR0.4	TP10371	
PAD_CR0.4	TP10372	
PAD_CR0.4	TP10373	
PAD_CR0.4	TP10374	
PAD_CR0.4	TP10375	
PAD_CR0.4	TP10376	
PAD_CR0.4	TP10377	
PAD_CR0.4	TP10378	
PAD_CR0.4	TP10379	
PAD_CR0.4	TP10380	
PAD_CR0.4	TP10381	
PAD_CR0.4	TP10382	
PAD_CR0.4	TP10383	
PAD_CR0.4	TP10384	
PAD_CR0.4	TP10385	
PAD_CR0.4	TP10386	
PAD_CR0.4	TP10387	
PAD_CR0.4	TP10388	
PAD_CR0.4	TP10389	
PAD_CR0.4	TP10390	
PAD_CR0.4	TP11309	
PAD_CR0.4	TP11310	
PAD_CR0.4	TP11311	
PAD_CR0.4	TP11312	
PAD_CR0.4	TP11313	
PAD_CR0.4	TP11314	
PAD_CR0.4	TP11315	
PAD_CR0.4	TP11316	
PAD_CR0.4	TP11317	
PAD_CR0.4	TP11318	
PAD_CR0.4	TP10391	
PAD_CR0.4	TP10398	
PAD_CR0.4	TP10401	
PAD_CR0.4	TP10408	
PAD_CR0.4	TP10411	
PAD_CR0.4	TP10418	
PAD_CR0.4	TP10421	
PAD_CR0.4	TP10428	
PAD_CR0.4	TP10431	
PAD_CR0.4	TP10438	
PAD_CR0.4	TP10392	
PAD_CR0.4	TP10397	
PAD_CR0.4	TP10402	
PAD_CR0.4	TP10407	
PAD_CR0.4	TP10412	
PAD_CR0.4	TP10417	
PAD_CR0.4	TP10422	
PAD_CR0.4	TP10427	
PAD_CR0.4	TP10432	
PAD_CR0.4	TP10437	
PAD_CR0.4	TP10393	
PAD_CR0.4	TP10398	
PAD_CR0.4	TP10403	
PAD_CR0.4	TP10408	
PAD_CR0.4	TP10413	
PAD_CR0.4	TP10418	
PAD_CR0.4	TP10423	
PAD_CR0.4	TP10428	
PAD_CR0.4	TP10433	
PAD_CR0.4	TP10438	
PAD_CR0.4	TP10394	
PAD_CR0.4	TP10399	
PAD_CR0.4	TP10404	
PAD_CR0.4	TP10409	
PAD_CR0.4	TP10414	
PAD_CR0.4	TP10419	
PAD_CR0.4	TP10424	
PAD_CR0.4	TP10429	
PAD_CR0.4	TP10434	
PAD_CR0.4	TP10439	
PAD_CR0.4	TP10395	
PAD_CR0.4	TP10400	
PAD_CR0.4	TP10405	
PAD_CR0.4	TP10410	
PAD_CR0.4	TP10415	
PAD_CR0.4	TP10420	
PAD_CR0.4	TP10425	
PAD_CR0.4	TP10430	
PAD_CR0.4	TP10435	
PAD_CR0.4	TP10440	
PAD_CR0.4	TP11319	
PAD_CR0.4	TP11320	
PAD_CR0.4	TP11321	
PAD_CR0.4	TP11322	
PAD_CR0.4	TP11323	
PAD_CR0.4	TP11324	
PAD_CR0.4	TP11325	
PAD_CR0.4	TP11326	
PAD_CR0.4	TP11327	
PAD_CR0.4	TP11328	
PAD_CR0.4	TP10441	
PAD_CR0.4	TP10446	
PAD_CR0.4	TP10451	
PAD_CR0.4	TP10456	
PAD_CR0.4	TP10461	
PAD_CR0.4	TP10466	
PAD_CR0.4	TP10471	
PAD_CR0.4	TP10476	
PAD_CR0.4	TP10481	
PAD_CR0.4	TP10486	
PAD_CR0.4	TP10442	
PAD_CR0.4	TP10447	
PAD_CR0.4	TP10452	
PAD_CR0.4	TP10457	
PAD_CR0.4	TP10462	
PAD_CR0.4	TP10467	
PAD_CR0.4	TP10472	
PAD_CR0.4	TP10477	
PAD_CR0.4	TP10482	
PAD_CR0.4	TP10487	
PAD_CR0.4	TP10443	
PAD_CR0.4	TP10448	
PAD_CR0.4	TP10453	
PAD_CR0.4	TP10458	
PAD_CR0.4	TP10463	
PAD_CR0.4	TP10468	
PAD_CR0.4	TP10473	
PAD_CR0.4	TP10478	
PAD_CR0.4	TP10483	
PAD_CR0.4	TP10488	
PAD_CR0.4	TP10444	
PAD_CR0.4	TP10449	
PAD_CR0.4	TP10454	
PAD_CR0.4	TP10459	
PAD_CR0.4	TP10464	
PAD_CR0.4	TP10469	
PAD_CR0.4	TP10474	
PAD_CR0.4	TP10479	
PAD_CR0.4	TP10484	
PAD_CR0.4	TP10489	
PAD_CR0.4	TP10445	
PAD_CR0.4	TP10450	
PAD_CR0.4	TP10455	
PAD_CR0.4	TP10460	
PAD_CR0.4	TP10465	
PAD_CR0.4	TP10470	
PAD_CR0.4	TP10475	
PAD_CR0.4	TP10480	
PAD_CR0.4	TP10485	
PAD_CR0.4	TP10490	
PAD_CR0.4	TP11329	
PAD_CR0.4	TP11331	
PAD_CR0.4	TP11332	
PAD_CR0.4	TP11333	
PAD_CR0.4	TP11334	
PAD_CR0.4	TP11335	
PAD_CR0.4	TP11336	
PAD_CR0.4	TP11337	
PAD_CR0.4	TP11338	
PAD_CR0.4	TP10491	
PAD_CR0.4	TP10496	
PAD_CR0.4	TP10501	
PAD_CR0.4	TP10506	
PAD_CR0.4	TP10511	
PAD_CR0.4	TP10516	
PAD_CR0.4	TP10521	
PAD_CR0.4	TP10526	
PAD_CR0.4	TP10531	
PAD_CR0.4	TP10536	
PAD_CR0.4	TP10492	
PAD_CR0.4	TP10497	
PAD_CR0.4	TP10502	
PAD_CR0.4	TP10507	
PAD_CR0.4	TP10512	
PAD_CR0.4	TP10517	
PAD_CR0.4	TP10522	
PAD_CR0.4	TP10527	
PAD_CR0.4	TP10532	
PAD_CR0.4	TP10537	
PAD_CR0.4	TP10498	
PAD_CR0.4	TP10503	
PAD_CR0.4	TP10508	
PAD_CR0.4	TP10513	
PAD_CR0.4	TP10518	
PAD_CR0.4	TP10523	
PAD_CR0.4	TP10528	
PAD_CR0.4	TP10533	
PAD_CR0.4	TP10538	
PAD_CR0.4	TP10494	
PAD_CR0.4	TP10499	
PAD_CR0.4	TP10504	
PAD_CR0.4	TP10509	
PAD_CR0.4	TP11359	
PAD_CR0.4	TP10519	
PAD_CR0.4	TP10524	
PAD_CR0.4	TP10529	
PAD_CR0.4	TP10534	
PAD_CR0.4	TP10539	
PAD_CR0.4	TP10495	
PAD_CR0.4	TP10500	
PAD_CR0.4	TP10505	
PAD_CR0.4	TP10510	
PAD_CR0.4	TP10515	
PAD_CR0.4	TP10520	
PAD_CR0.4	TP10525	
PAD_CR0.4	TP10530	
PAD_CR0.4	TP10535	
PAD_CR0.4	TP10540	
PAD_CR0.4	TP11340	
PAD_CR0.4	TP11341	
PAD_CR0.4	TP11342	
PAD_CR0.4	TP11494	
PAD_CR0.4	TP11495	
PAD_CR0.4	TP11496	

File	L3_MAIN		
Size	Document Number		Rev
A1	4G FRONT END		P6
Date:	Tuesday, October 19, 2021	Sheet	

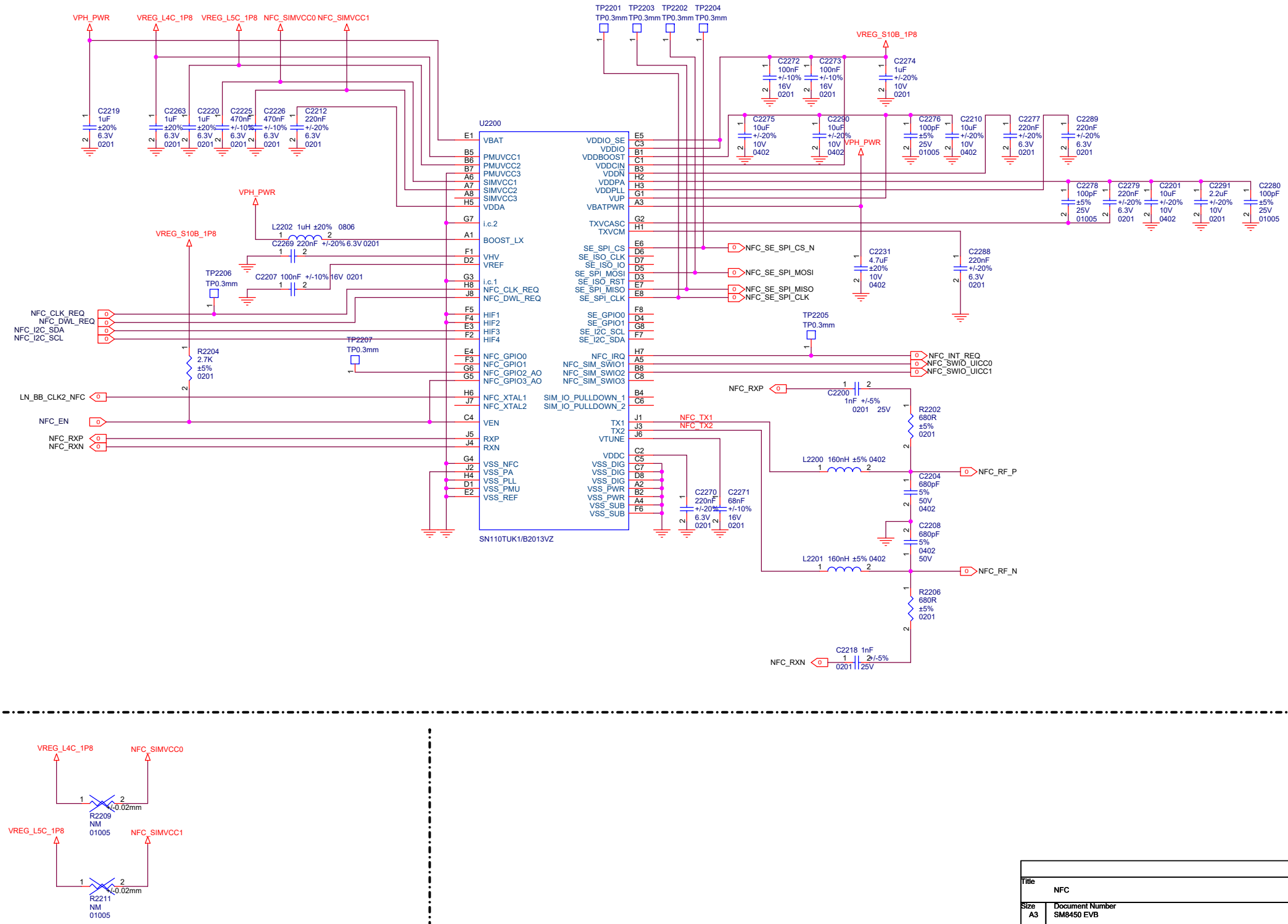

Title	NFC	
Size A3	Document Number SM8450 EVB	Rev P0
Date: Wednesday, October 20, 2021	Sheet 22	79

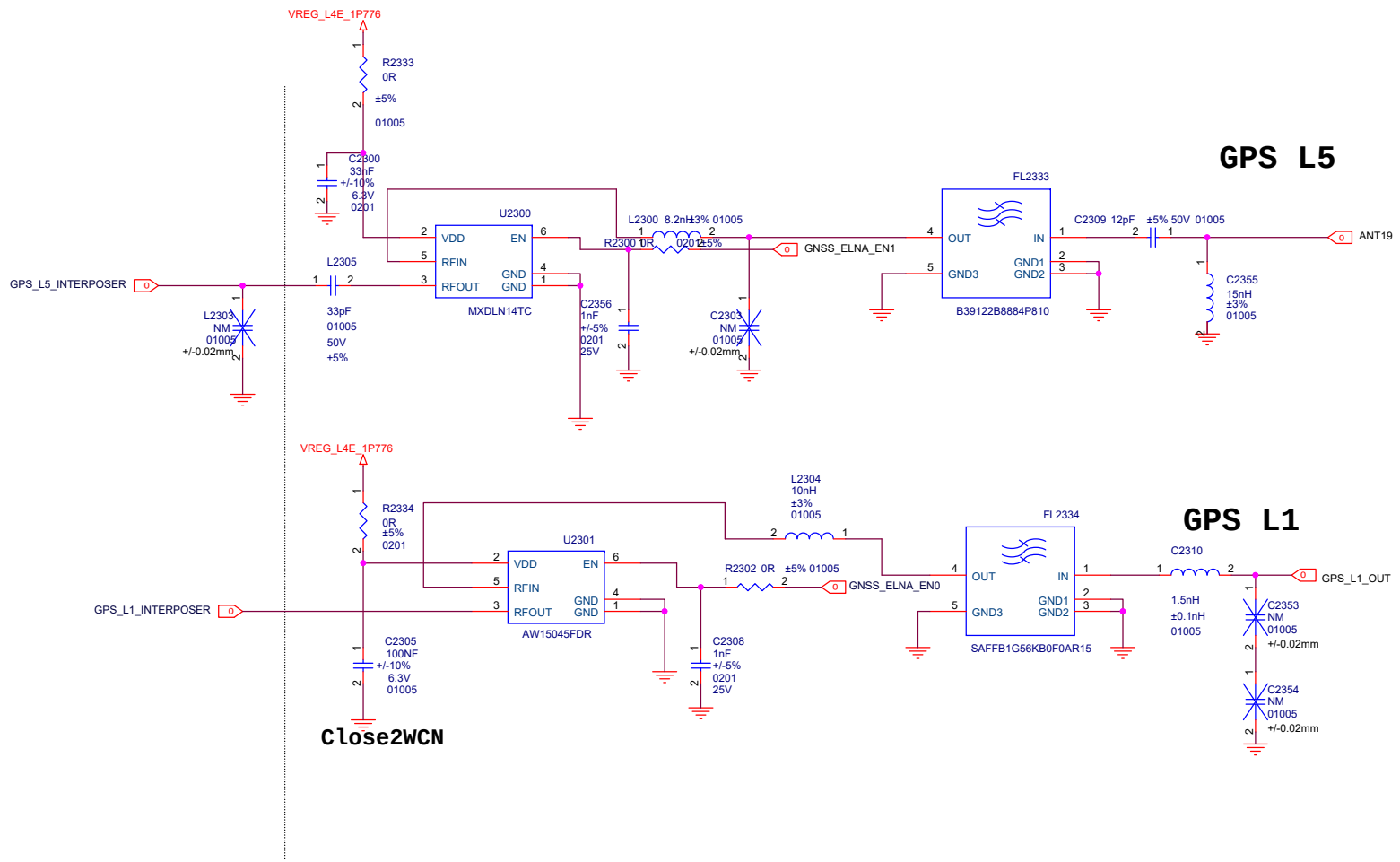

Title	GPS	
Size A3	Document Number SM8450 EVB	Rev P0
Date: Wednesday, October 20, 2021	Sheet 23	

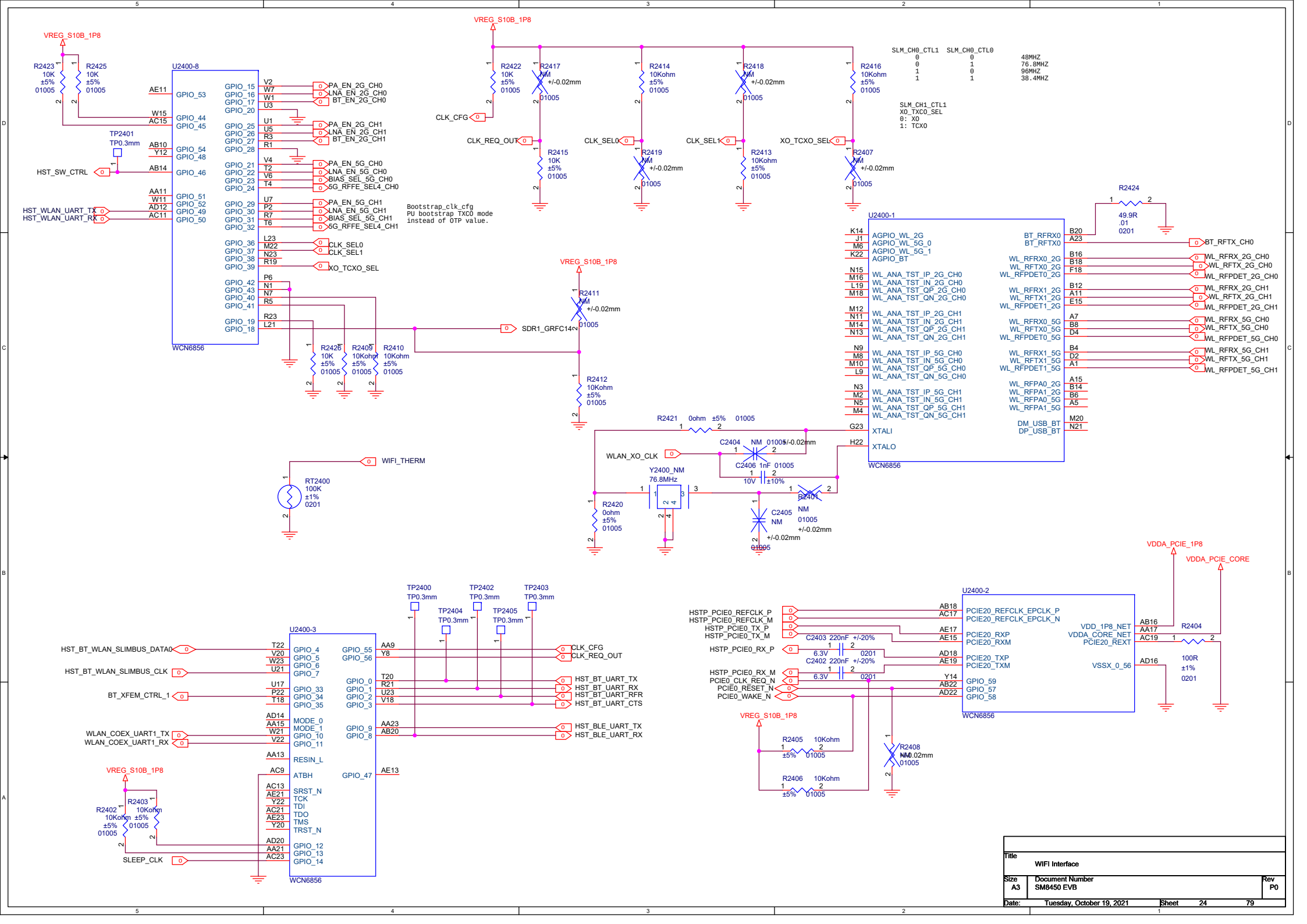

Title	WIFI Interface		
Size A3	Document Number SM8450 EVB		Rev P0
Date: Tuesday, October 19, 2021	Sheet 24	79	

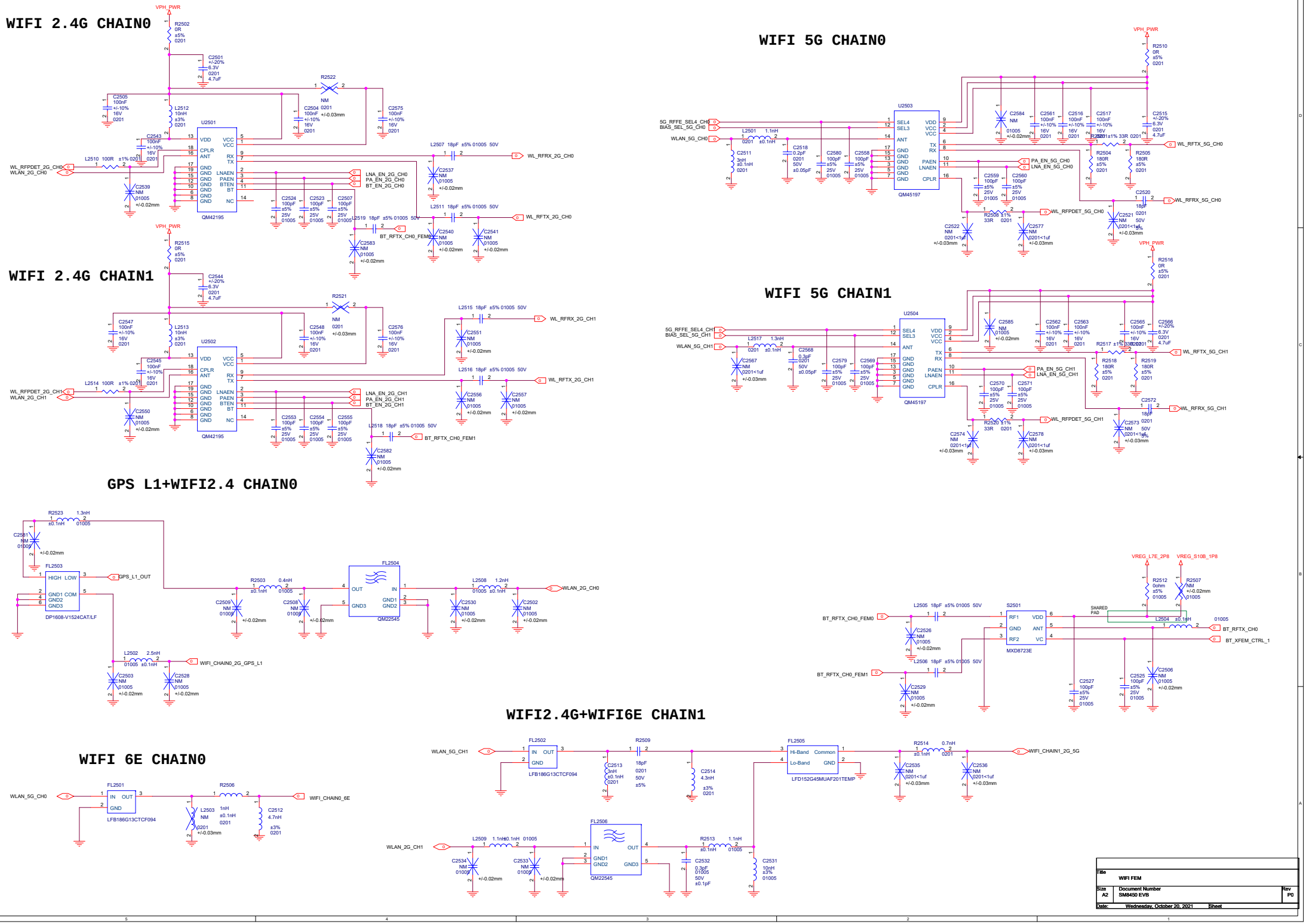
WIFI 2.4G CHAIN0
WIFI 5G CHAIN0
WIFI 2.4G CHAIN1
WIFI 5G CHAIN1
GPS L1+WIFI2.4 CHAIN0
WIFI2.4G+WIFI6E CHAIN1
WIFI 6E CHAIN0
VPH_PWR
U2501
QM42195
U2503
QM45197
U2502
U2504
FL2503
DP1608-V1524CAT/LF
FL2504
QM22545
FL2502
LFB186G13CTCF094
FL2505
LFD152G45MUAF201TEMP
FL2506
FL2501
S2501
MXD8723E
VREG_L7E_2P8
VREG_S10B_1P8
WIFI_CHAIN0_2G_GPS_L1
WIFI_CHAIN0_6E
WIFI_CHAIN1_2G_5G
WLAN_5G_CH1
WLAN_2G_CH0
BT_RFTX_CH0_FEM1
BT_XFEM_CTRL_1
Title
WIFI FEM
Size
A2
Document Number
SM8450 EVB
Rev
P0
Date:
Wednesday, October 20, 2021
Sheet

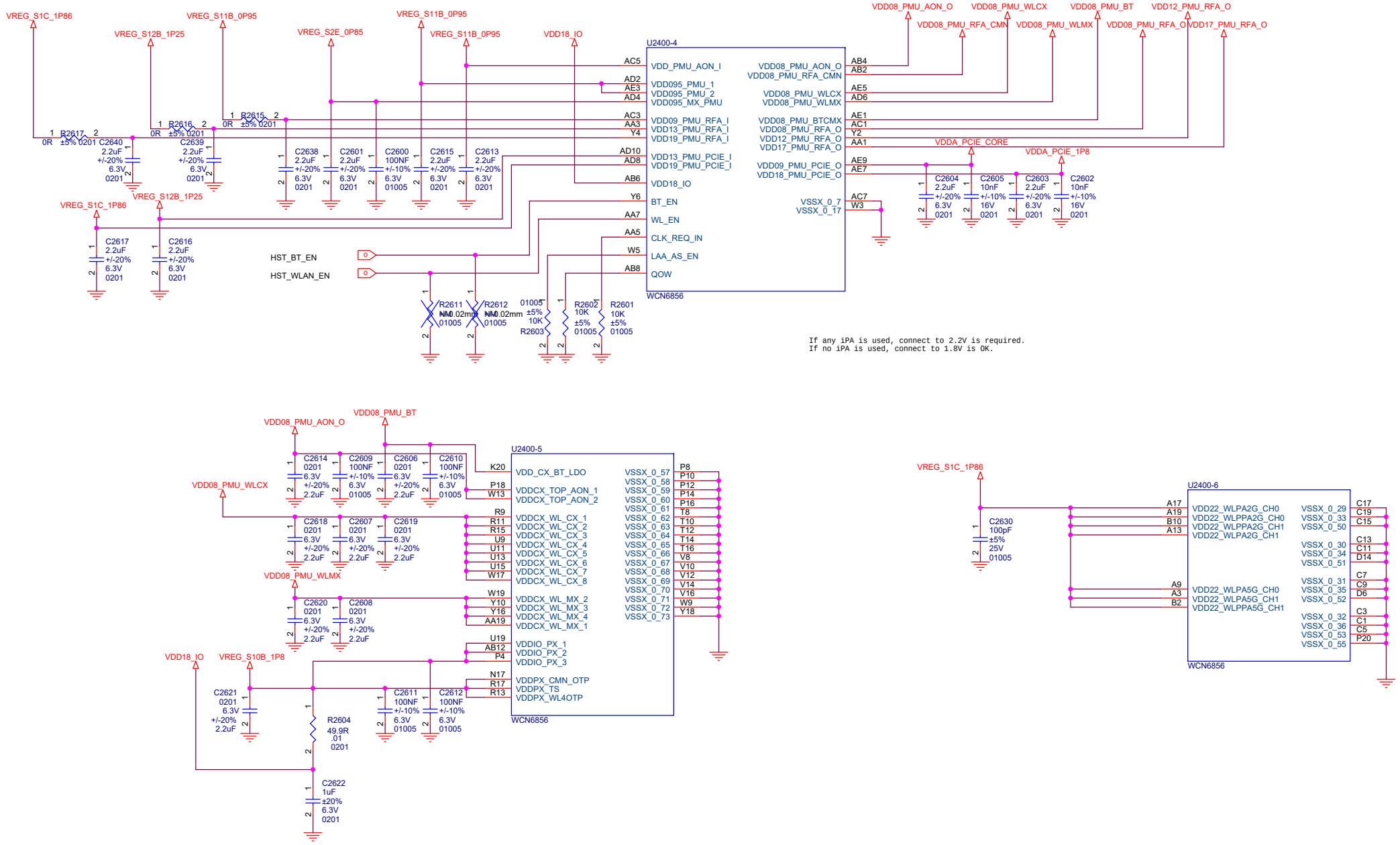

Title	WIFI Decouping1		
Size A3	Document Number SM8450 EVB		Rev P0
Date: Wednesday, October 20, 2021	Sheet 26	79	

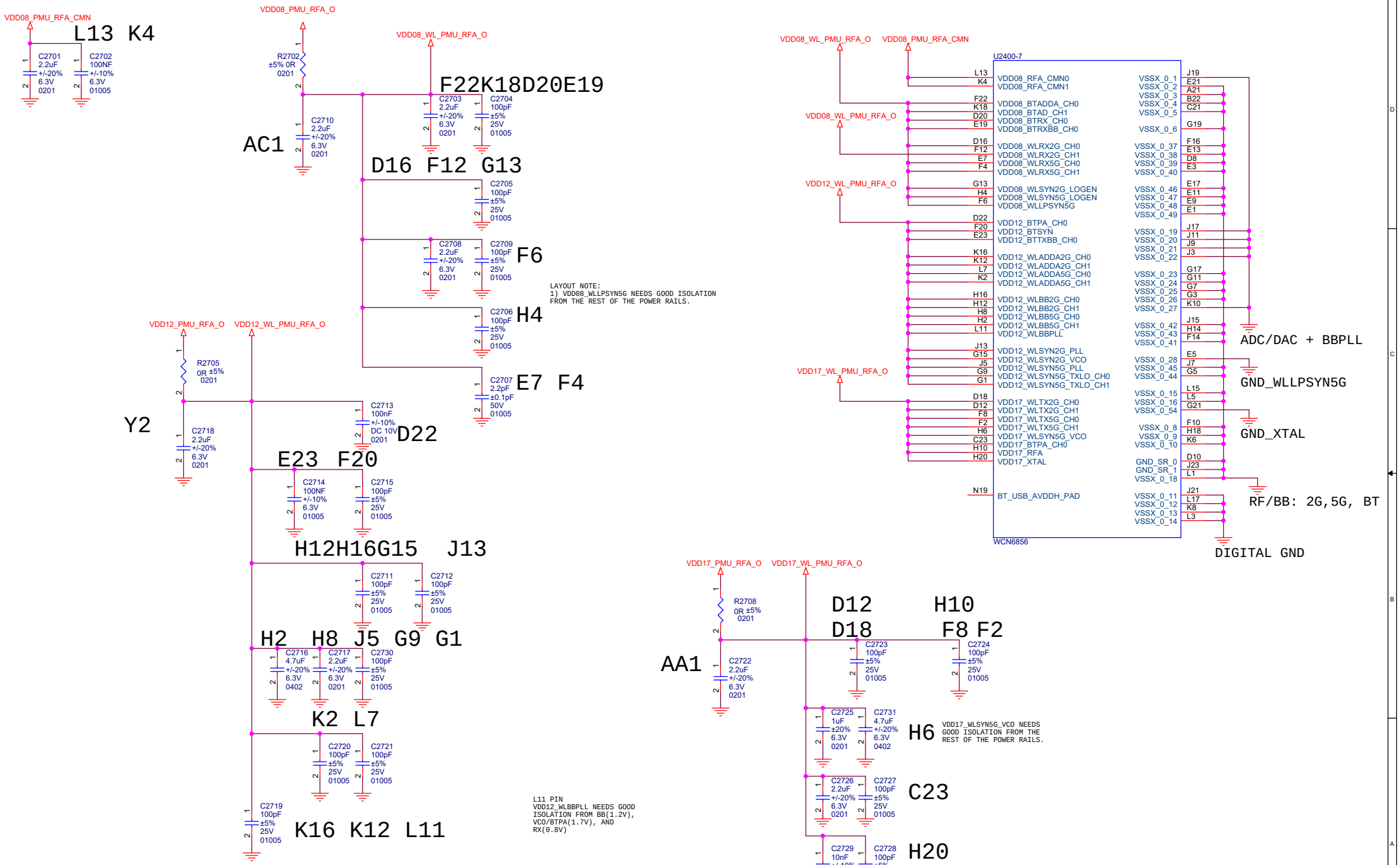

Title	WIFI Decouping2	
Size A3	Document Number SM8450 EVB	Rev P0
Date: Wednesday, October 20, 2021	Sheet 27	76

Title	L2_MAIN
Size A3	Document Number Reserved(for 11ad/11ax)
Rev	P0
Date:	Tuesday, October 19, 2021
Sheet	28 79

Title	L2_MAIN		
Size A3	Document Number UWB-1		Rev P0
Date: Tuesday, October 19, 2021		Sheet	

Title	L2_MAIN
Size A3	Document Number UWB-2
Rev	
Date: Tuesday, October 19, 2021	Sheet

Place all ZQ resistors close to SM8350

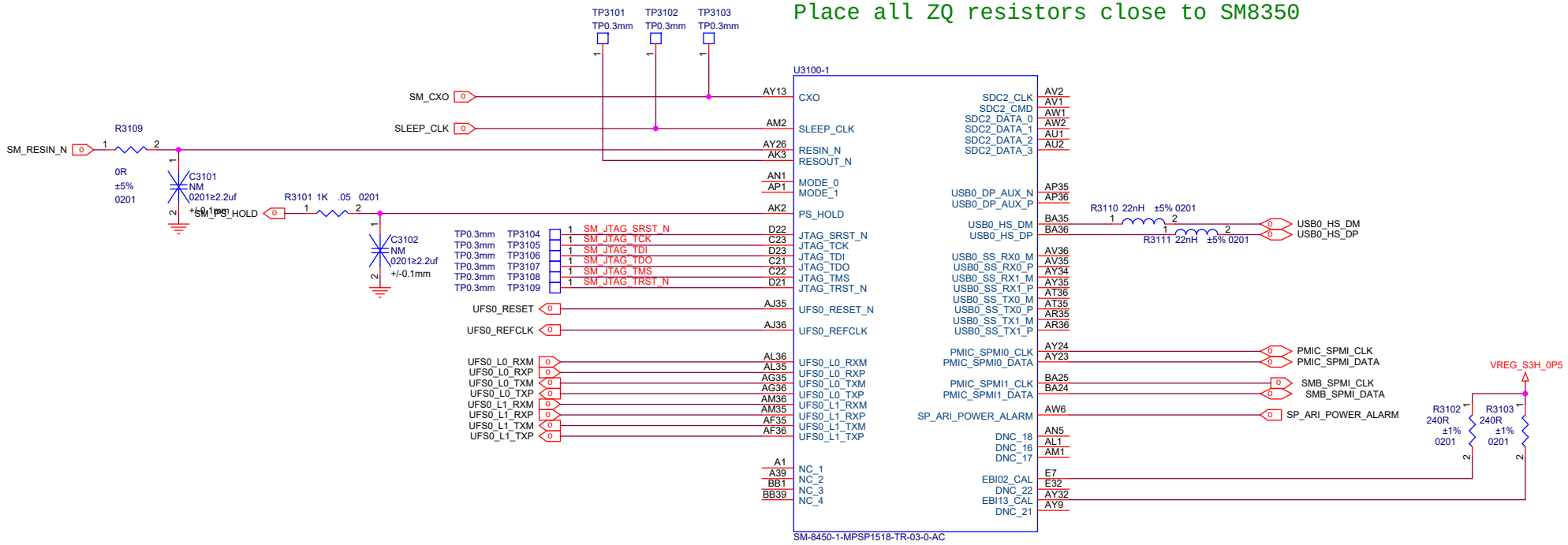

MSM skin temperature thermistor

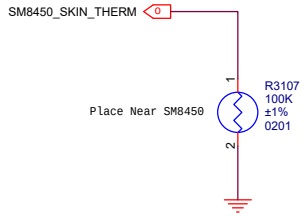

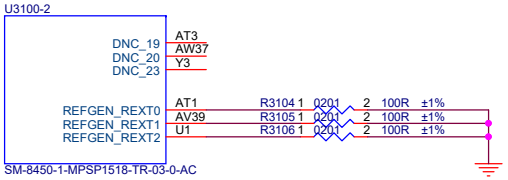

Quiet thermistor Place on a cool place

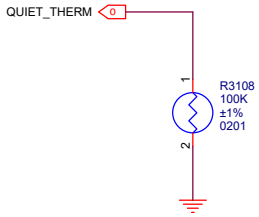

Title	L2_MAIN	
Size A3	Document Number SM8450 Control	Rev P0
Date: Wednesday, October 20, 2021	Sheet	

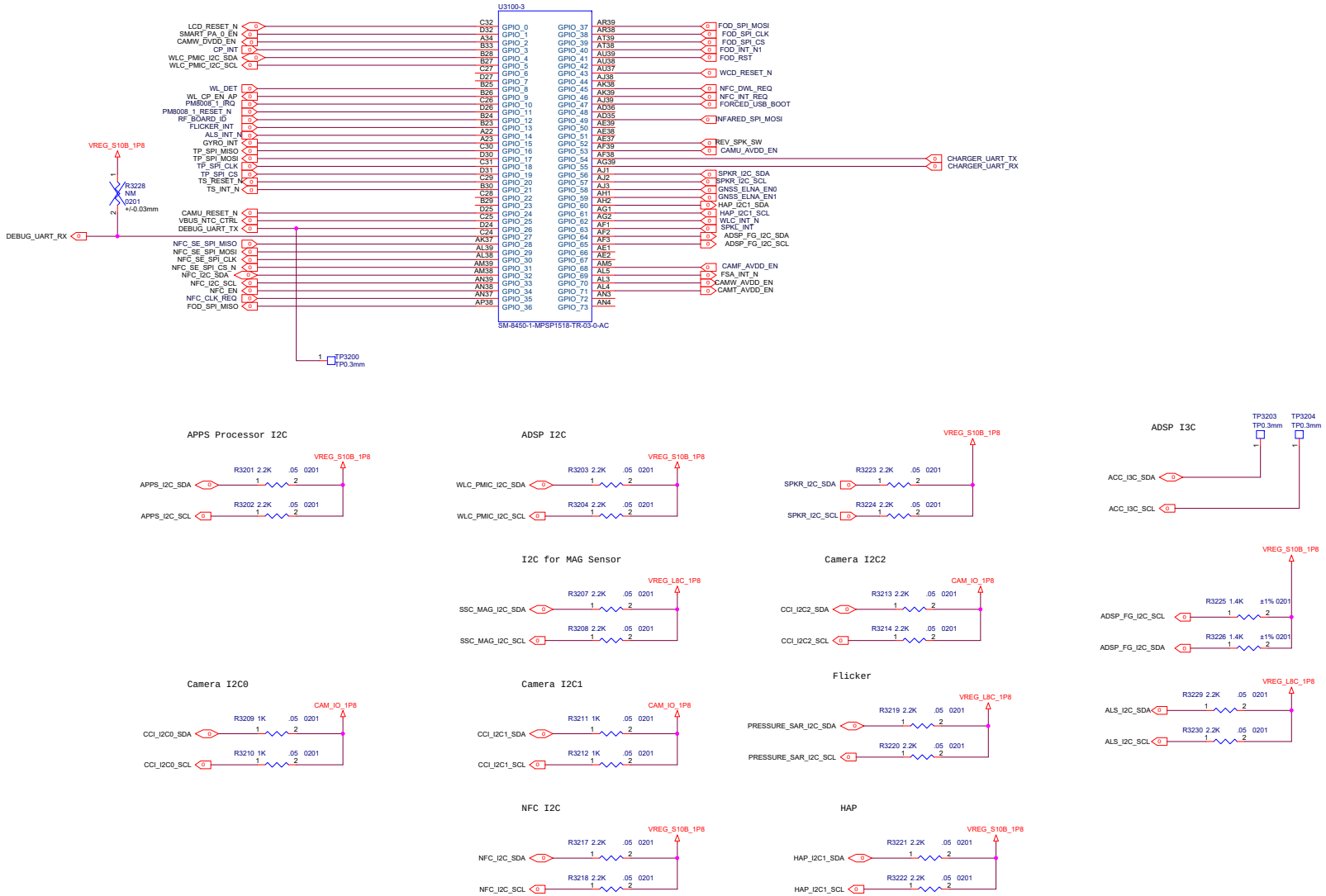

Title	L2_MAIN	
Size A2	Document Number SM8450 GPIO-1	Rev P0
Date: Tuesday, October 19, 2021	Sheet	

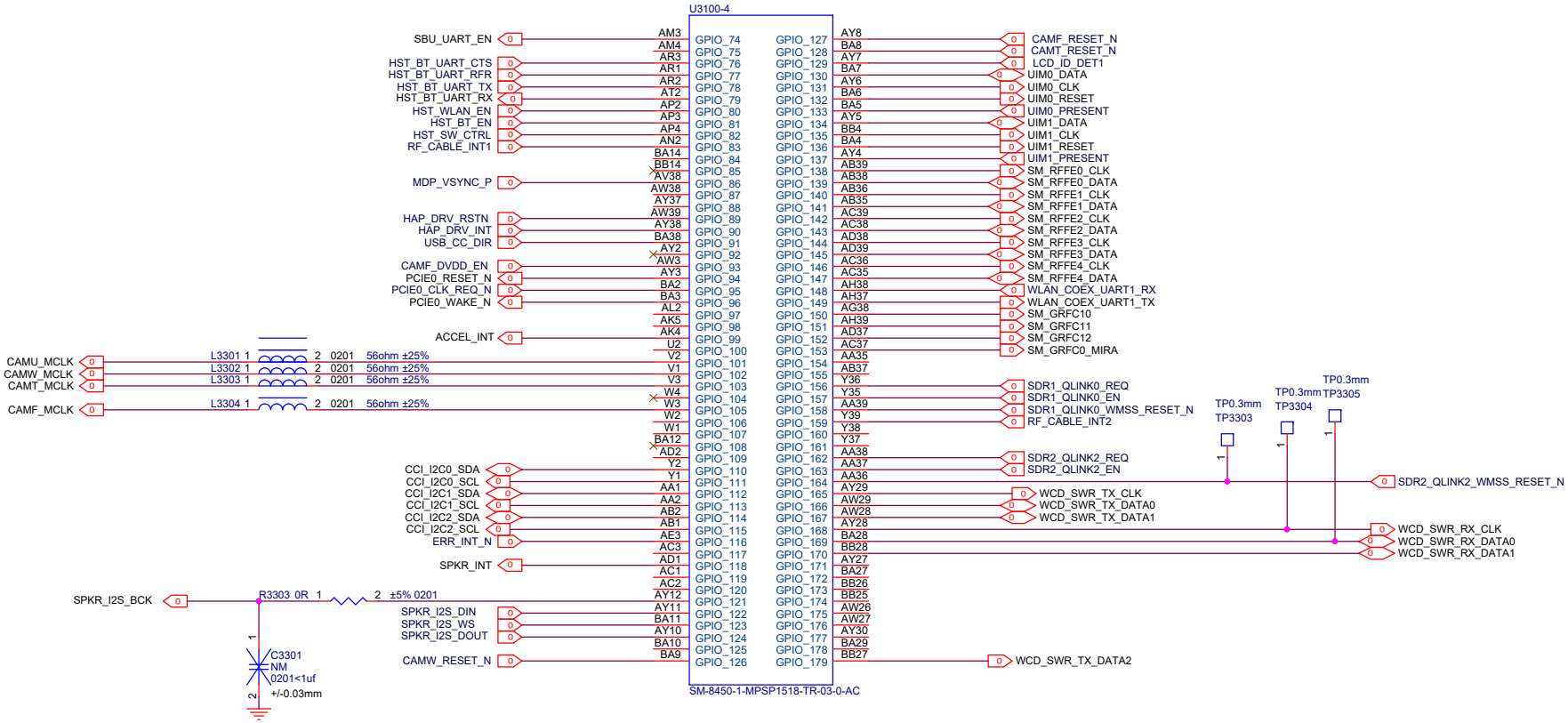

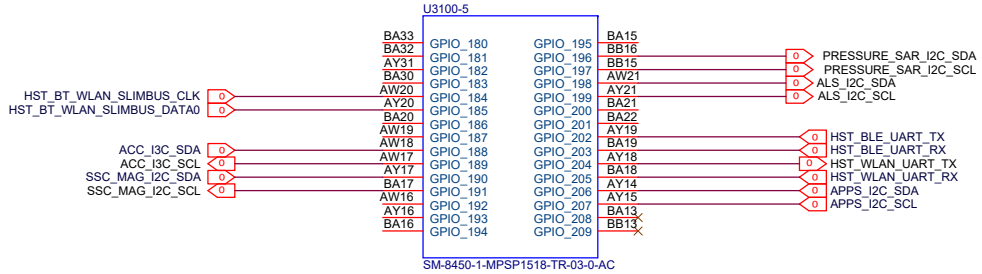

Title	L2_MAIN	
Size A3	Document Number SM8450 GPIO-2	Rev P0
Date: Tuesday, October 19, 2021	Sheet 33	79

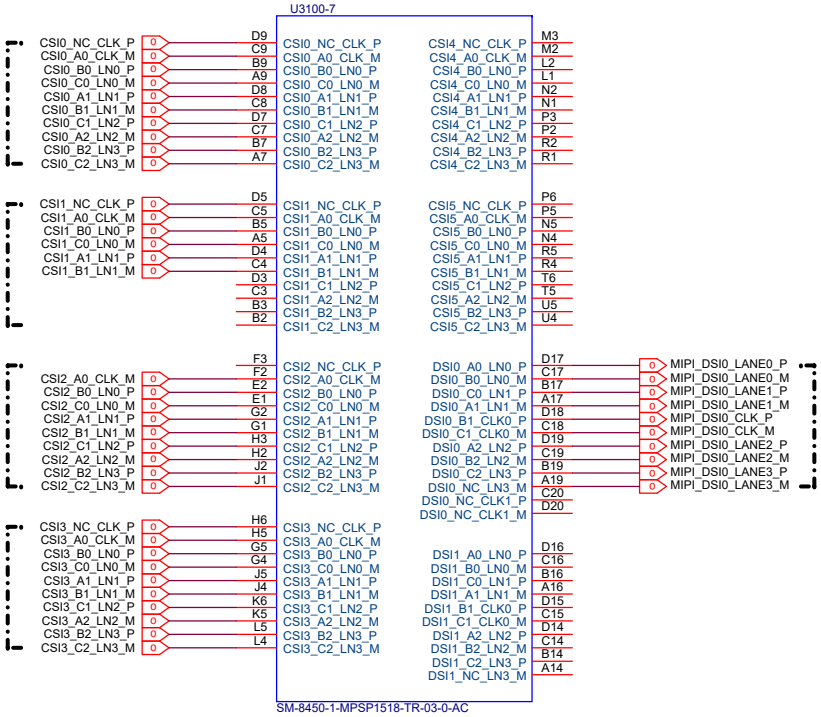

Title	L2_MAIN	
Size A3	Document Number SM8450 MIPI	Rev P0
Date: Tuesday, October 19, 2021	Sheet	

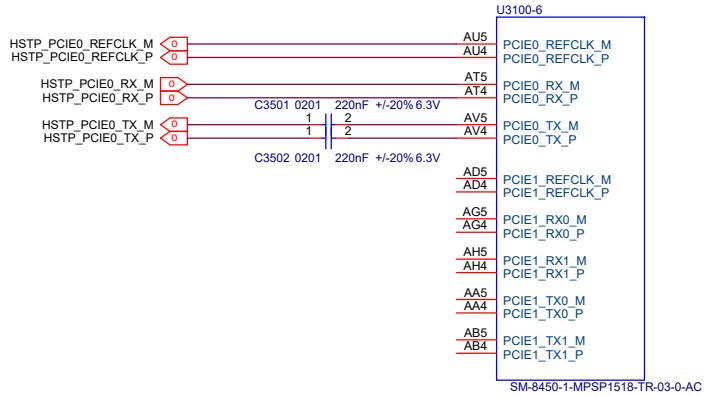

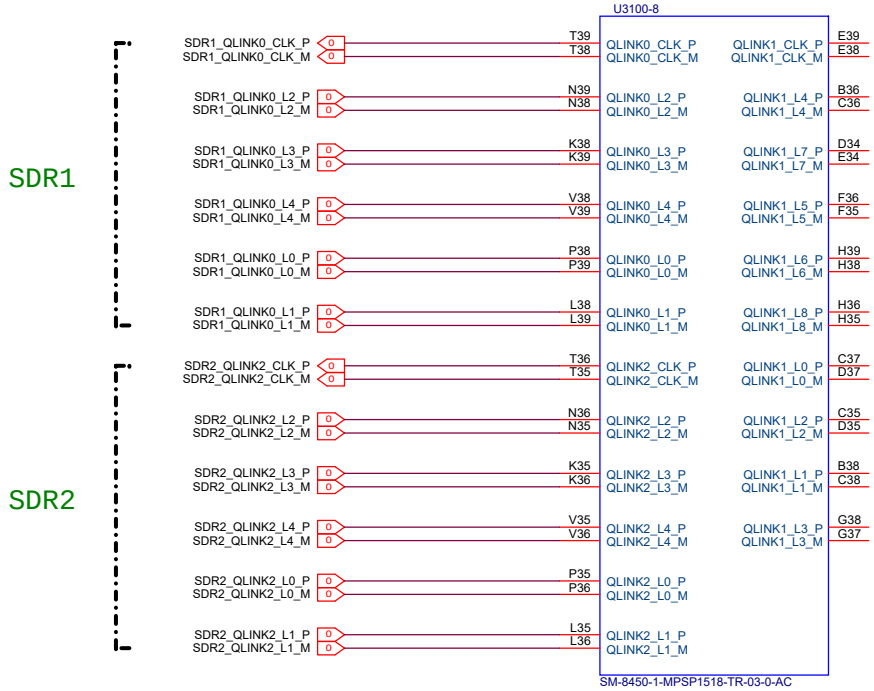

QLINK1 for mmW

Title	L2_MAIN	
Size A3	Document Number SM8450 RF MIPI	Rev P0
Date: Tuesday, October 19, 2021	Sheet	

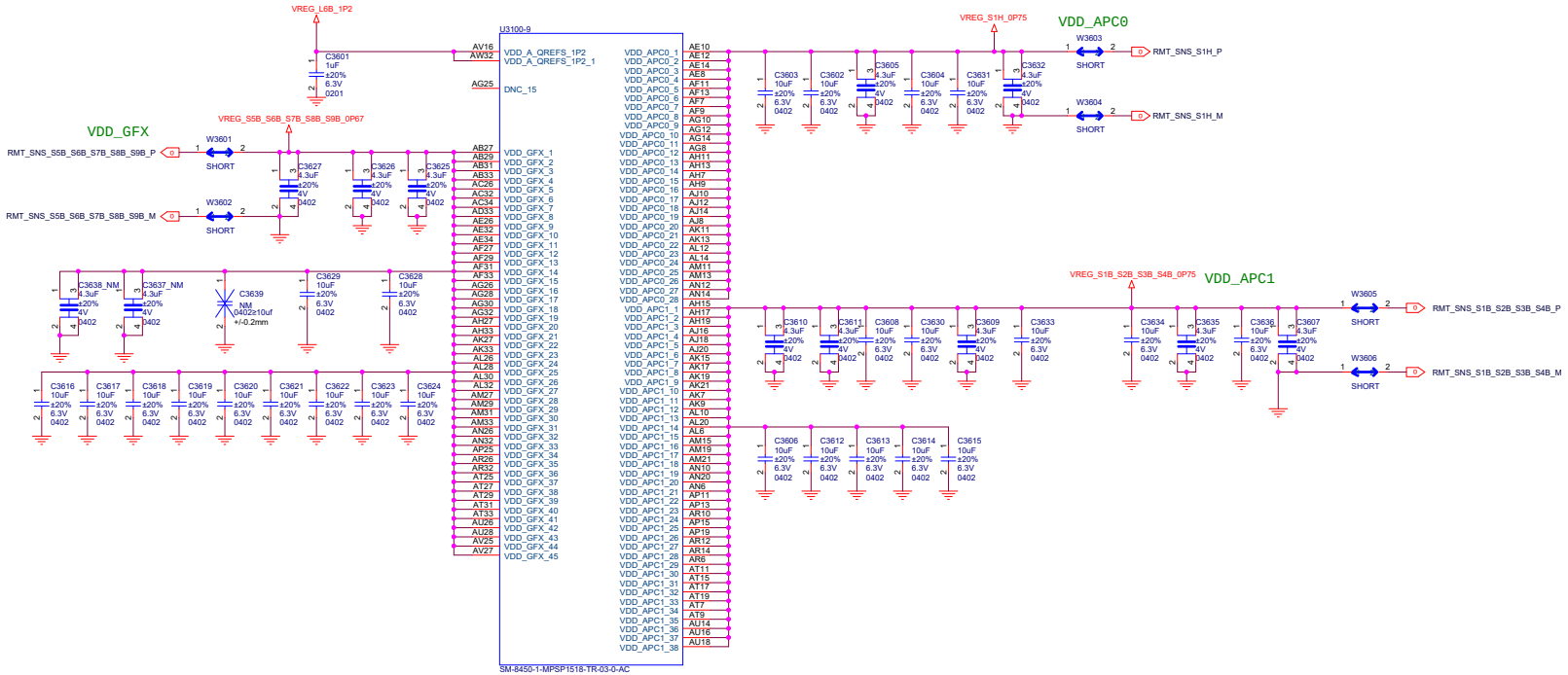

Title	L2_MAIN		
Size A2	Document Number SM8450 PWR1		Rev P0
Date: Wednesday, October 20, 2021	Sheet 36	79	

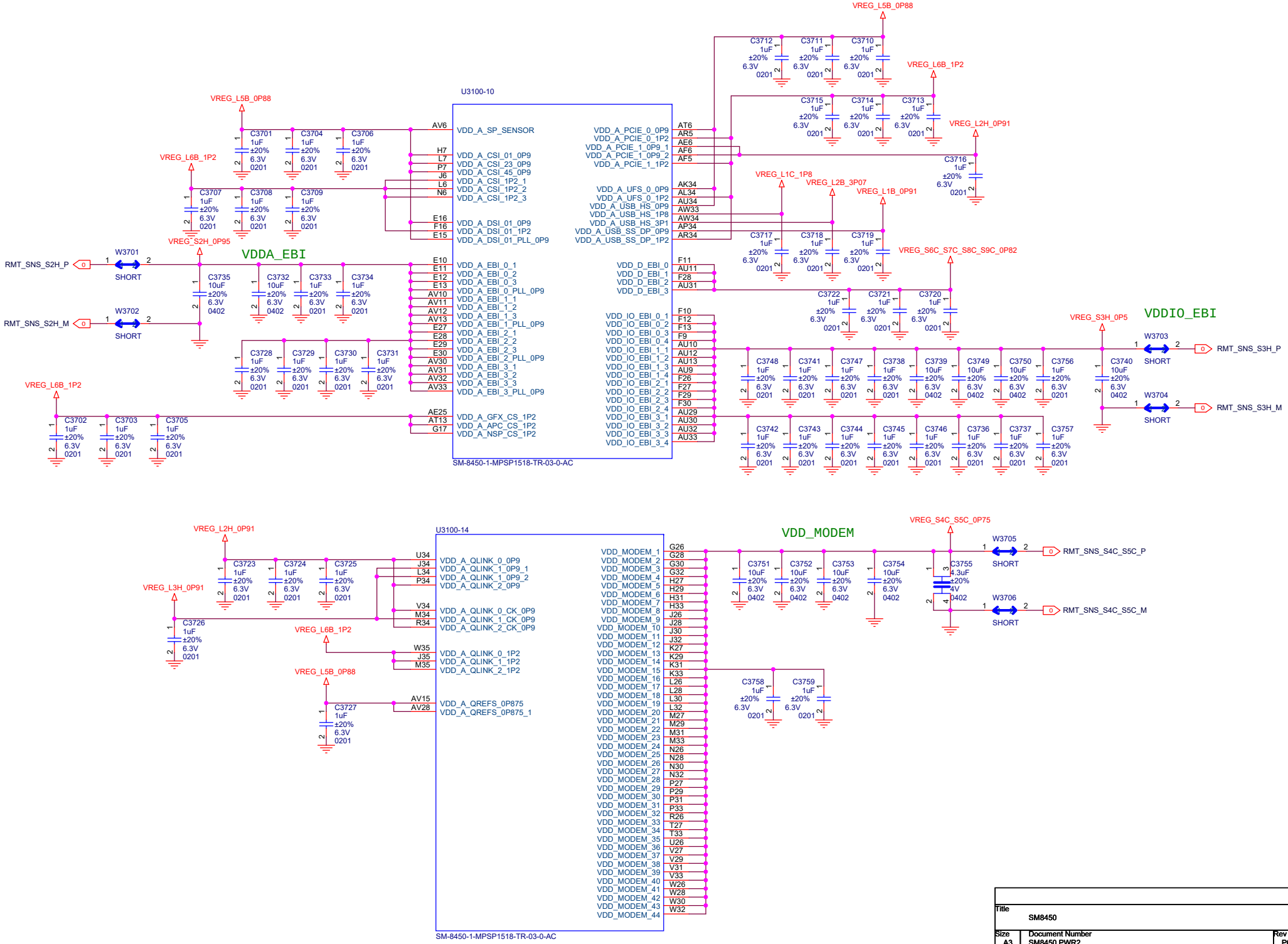

Title	SM8450
Size A3	Document Number SM8450 PWR2
Rev	P0
Date: Tuesday, October 19, 2021	Sheet 37 80

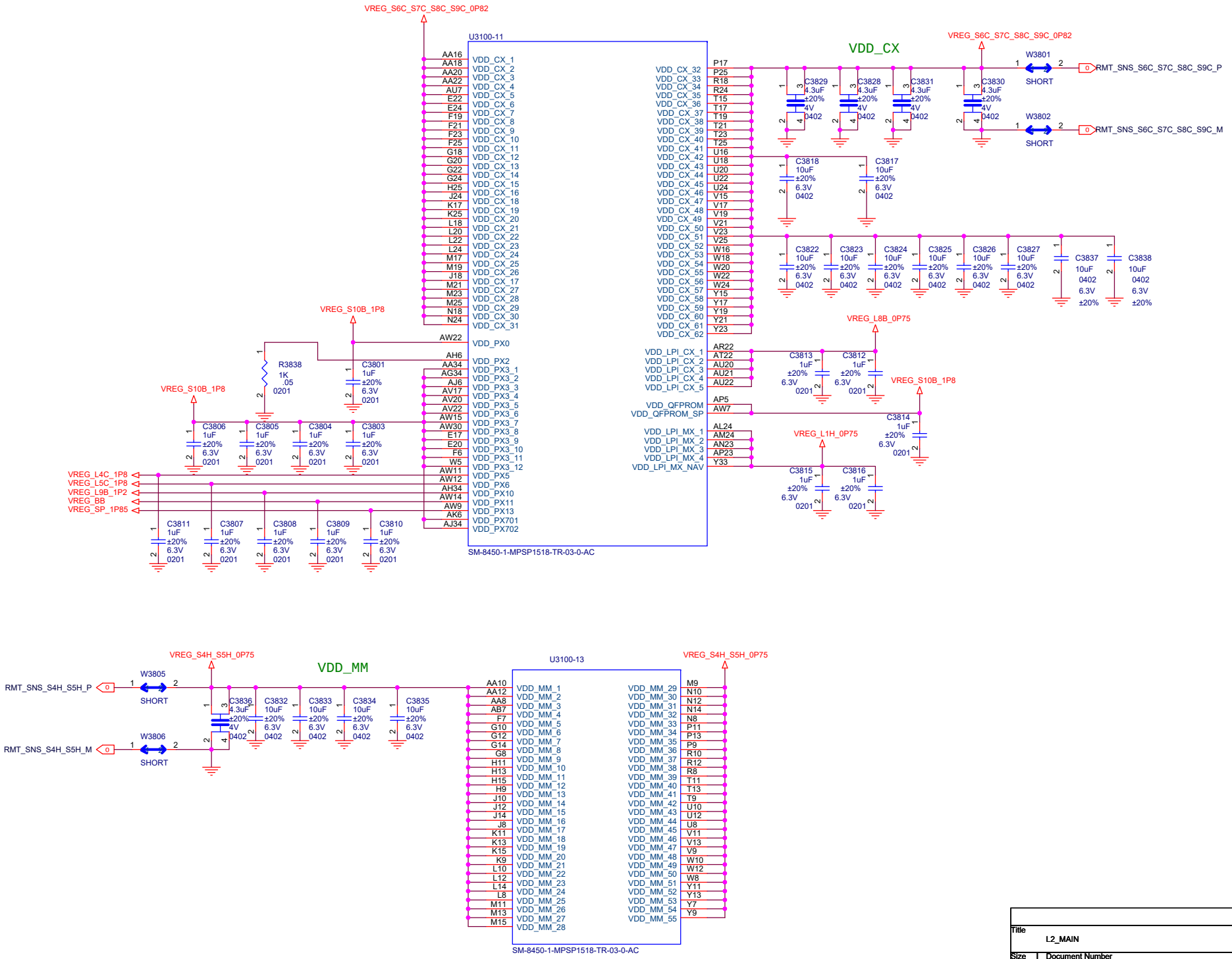

Title	L2_MAIN
Size A3	Document Number SM8450 PWR3
Rev	P0
Date:	Tuesday, October 19, 2021
Sheet	

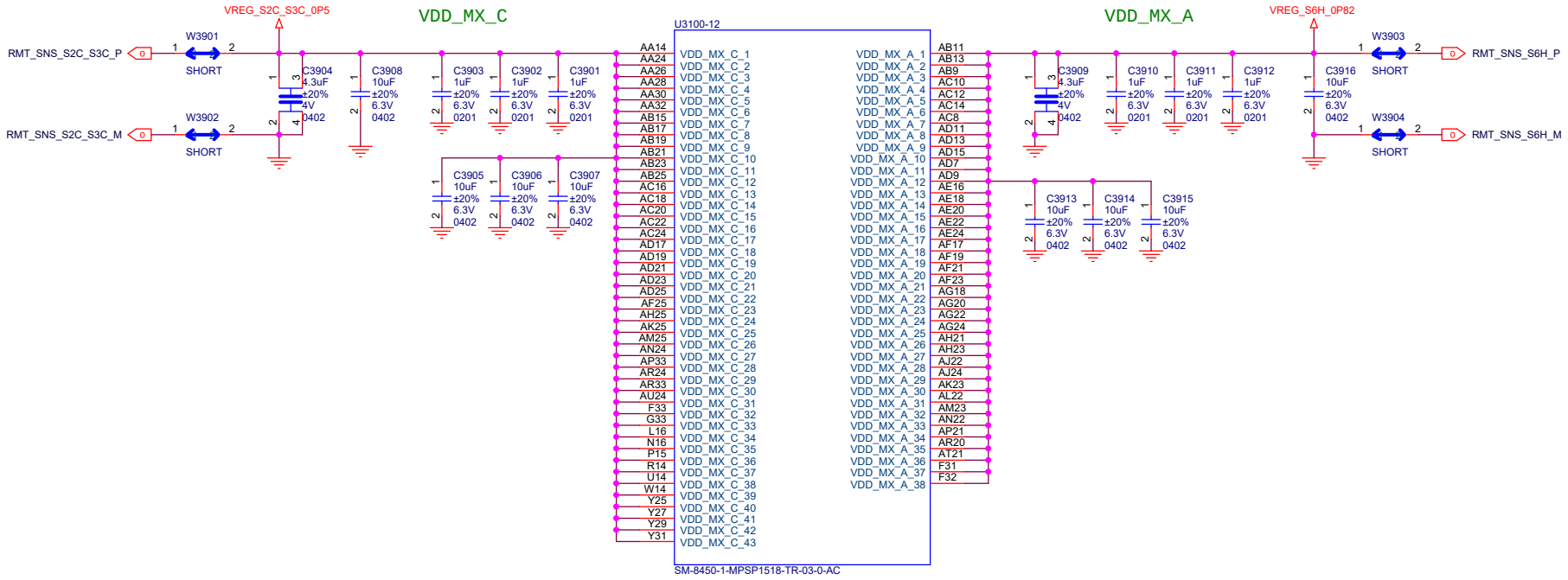

Title	L2_MAIN	
Size A3	Document Number SM8450 PWR4	Rev P0
Date: Tuesday, October 19, 2021	Sheet 39	79

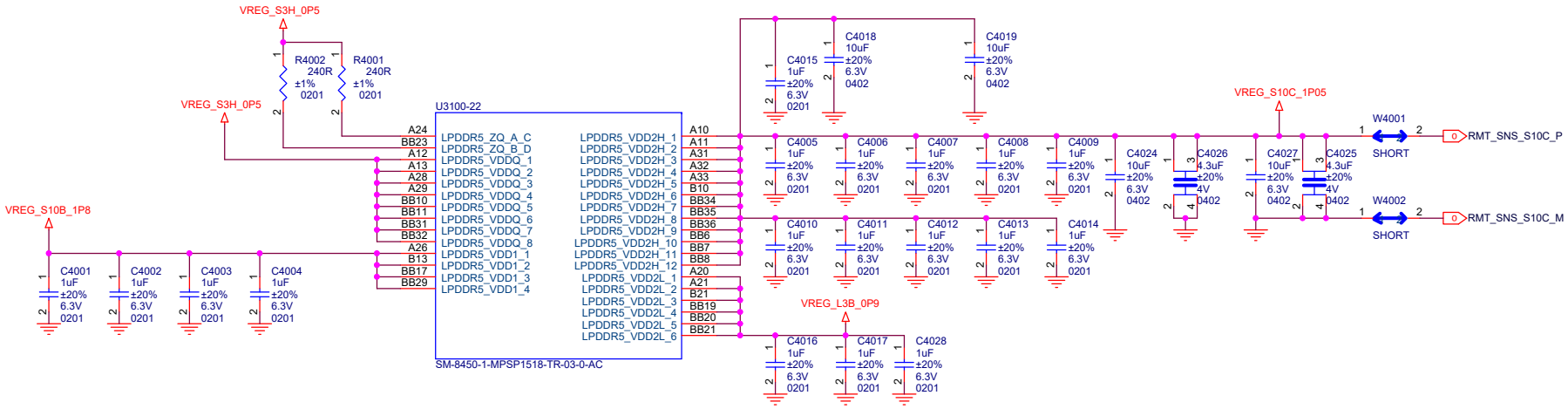

Title	L2_MAIN	
Size A3	Document Number SM8450 LP5 PWR	Rev P0
Date: Tuesday, October 19, 2021	Sheet	

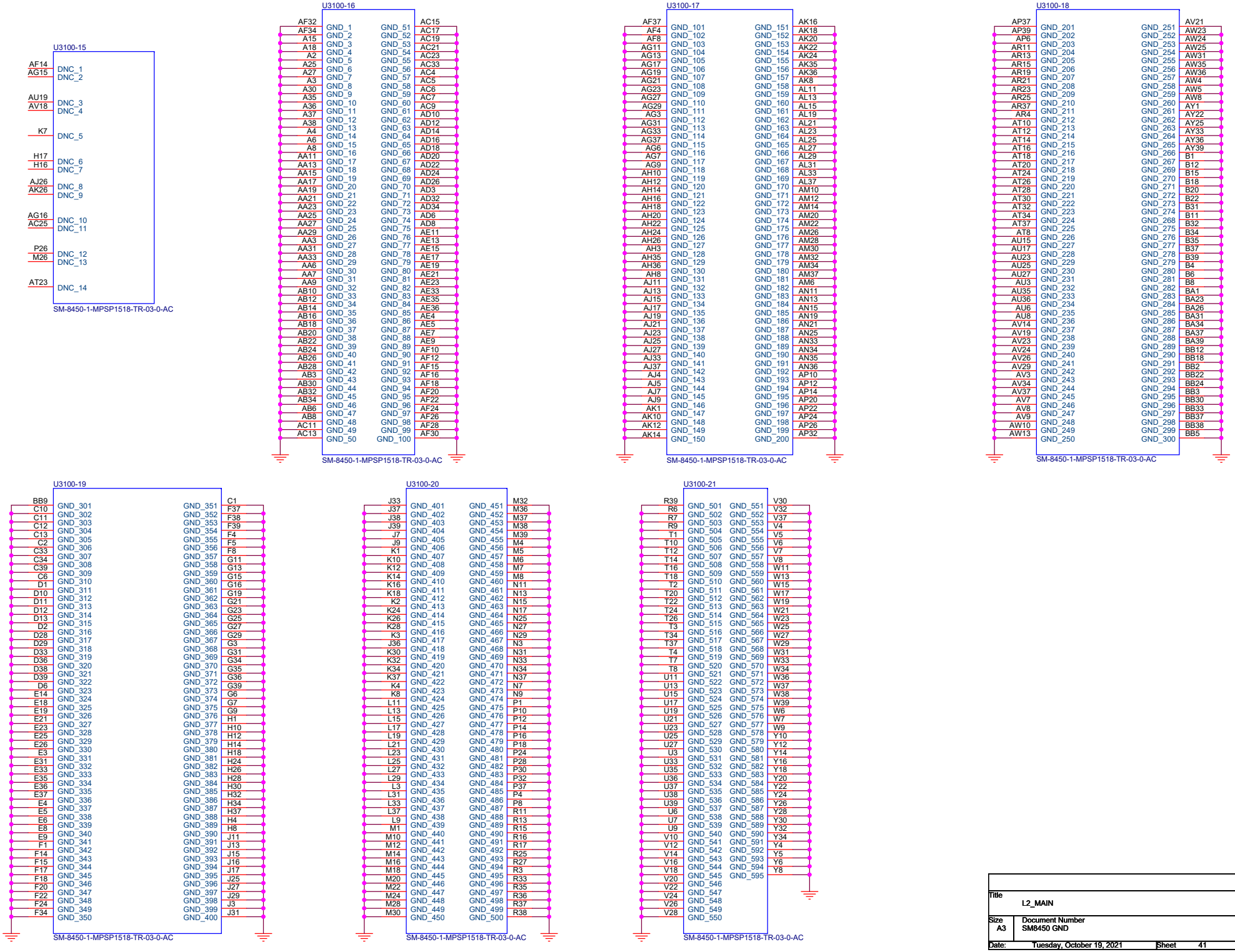
U3100-15
AF14 DNC_1
AG15 DNC_2
AU19 DNC_3
AV18 DNC_4
K7 DNC_5
H17 DNC_6
H16 DNC_7
AJ26 DNC_8
AK26 DNC_9
AG16 DNC_10
AC25 DNC_11
P26 DNC_12
M26 DNC_13
AT23 DNC_14
SM-8450-1-MPSP1518-TR-03-0-AC
U3100-16
AF32 GND_1
AF34 GND_2
A15 GND_3
A18 GND_4
A2 GND_5
A25 GND_6
A27 GND_7
A3 GND_8
A30 GND_9
A35 GND_10
A36 GND_11
A37 GND_12
A38 GND_13
A4 GND_14
A6 GND_15
A8 GND_16
AA11 GND_17
AA13 GND_18
AA15 GND_19
AA17 GND_20
AA19 GND_21
AA21 GND_22
AA23 GND_23
AA25 GND_24
AA27 GND_25
AA29 GND_26
AA3 GND_27
AA31 GND_28
AA33 GND_29
AA6 GND_30
AA7 GND_31
AA9 GND_32
AB10 GND_33
AB12 GND_34
AB14 GND_35
AB16 GND_36
AB18 GND_37
AB20 GND_38
AB22 GND_39
AB24 GND_40
AB26 GND_41
AB28 GND_42
AB3 GND_43
AB30 GND_44
AB32 GND_45
AB34 GND_46
AB6 GND_47
AB8 GND_48
AC11 GND_49
AC13 GND_50
GND_51 AC15
GND_52 AC17
GND_53 AC19
GND_54 AC21
GND_55 AC23
GND_56 AC33
GND_57 AC4
GND_58 AC5
GND_59 AC6
GND_60 AC7
GND_61 AC9
GND_62 AD10
GND_63 AD12
GND_64 AD14
GND_65 AD16
GND_66 AD18
GND_67 AD20
GND_68 AD22
GND_69 AD24
GND_70 AD26
GND_71 AD3
GND_72 AD32
GND_73 AD34
GND_74 AD6
GND_75 AD8
GND_76 AE11
GND_77 AE13
GND_78 AE15
GND_79 AE17
GND_80 AE19
GND_81 AE21
GND_82 AE23
GND_83 AE33
GND_84 AE35
GND_85 AE36
GND_86 AE4
GND_87 AE5
GND_88 AE7
GND_89 AE9
GND_90 AF10
GND_91 AF12
GND_92 AF15
GND_93 AF16
GND_94 AF18
GND_95 AF20
GND_96 AF22
GND_97 AF24
GND_98 AF26
GND_99 AF28
GND_100 AF30
SM-8450-1-MPSP1518-TR-03-0-AC
U3100-17
AF37 GND_101
AF4 GND_102
AF8 GND_103
AG11 GND_104
AG13 GND_105
AG17 GND_106
AG19 GND_107
AG21 GND_108
AG23 GND_109
AG27 GND_110
AG29 GND_111
AG3 GND_112
AG31 GND_113
AG33 GND_114
AG37 GND_115
AG6 GND_116
AG7 GND_117
AG9 GND_118
AH10 GND_119
AH12 GND_120
AH14 GND_121
AH16 GND_122
AH18 GND_123
AH20 GND_124
AH22 GND_125
AH24 GND_126
AH26 GND_127
AH3 GND_128
AH35 GND_129
AH36 GND_130
AH8 GND_131
AJ11 GND_132
AJ13 GND_133
AJ15 GND_134
AJ17 GND_135
AJ19 GND_136
AJ21 GND_137
AJ23 GND_138
AJ25 GND_139
AJ27 GND_140
AJ33 GND_141
AJ37 GND_142
AJ4 GND_143
AJ5 GND_144
AJ7 GND_145
AJ9 GND_146
AK1 GND_147
AK10 GND_148
AK12 GND_149
AK14 GND_150
GND_151 AK16
GND_152 AK18
GND_153 AK20
GND_154 AK22
GND_155 AK24
GND_156 AK35
GND_157 AK36
GND_158 AK8
GND_159 AL11
GND_160 AL13
GND_161 AL15
GND_162 AL19
GND_163 AL21
GND_164 AL23
GND_165 AL25
GND_166 AL27
GND_167 AL29
GND_168 AL31
GND_169 AL33
GND_170 AL37
GND_171 AM10
GND_172 AM12
GND_173 AM14
GND_174 AM20
GND_175 AM22
GND_176 AM26
GND_177 AM28
GND_178 AM30
GND_179 AM32
GND_180 AM34
GND_181 AM37
GND_182 AM6
GND_183 AN11
GND_184 AN13
GND_185 AN15
GND_186 AN19
GND_187 AN21
GND_188 AN25
GND_189 AN33
GND_190 AN34
GND_191 AN35
GND_192 AN36
GND_193 AP10
GND_194 AP12
GND_195 AP14
GND_196 AP20
GND_197 AP22
GND_198 AP24
GND_199 AP26
GND_200 AP32
SM-8450-1-MPSP1518-TR-03-0-AC
U3100-18
AP37 GND_201
AP39 GND_202
AP6 GND_203
AR11 GND_204
AR13 GND_205
AR15 GND_206
AR19 GND_207
AR21 GND_208
AR23 GND_209
AR25 GND_210
AR37 GND_211
AR4 GND_212
AT10 GND_213
AT12 GND_214
AT14 GND_215
AT16 GND_216
AT18 GND_217
AT20 GND_218
AT24 GND_219
AT26 GND_220
AT28 GND_221
AT30 GND_222
AT32 GND_223
AT34 GND_224
AT37 GND_225
AT8 GND_226
AU15 GND_227
AU17 GND_228
AU23 GND_229
AU25 GND_230
AU27 GND_231
AU3 GND_232
AU35 GND_233
AU36 GND_234
AU6 GND_235
AU8 GND_236
AV14 GND_237
AV19 GND_238
AV23 GND_239
AV24 GND_240
AV26 GND_241
AV29 GND_242
AV3 GND_243
AV34 GND_244
AV37 GND_245
AV7 GND_246
AV8 GND_247
AV9 GND_248
AW10 GND_249
AW13 GND_250
GND_251 AV21
GND_252 AW23
GND_253 AW24
GND_254 AW25
GND_255 AW31
GND_256 AW35
GND_257 AW36
GND_258 AW4
GND_259 AW5
GND_260 AW8
GND_261 AY1
GND_262 AY22
GND_263 AY25
GND_264 AY33
GND_265 AY36
GND_266 AY39
GND_267 B1
GND_268 B12
GND_269 B15
GND_270 B18
GND_271 B20
GND_272 B22
GND_273 B31
GND_274 B11
GND_275 B32
GND_276 B34
GND_277 B35
GND_278 B37
GND_279 B39
GND_280 B4
GND_281 B6
GND_282 B8
GND_283 BA1
GND_284 BA23
GND_285 BA26
GND_286 BA31
GND_287 BA34
GND_288 BA37
GND_289 BA39
GND_290 BB12
GND_291 BB18
GND_292 BB2
GND_293 BB22
GND_294 BB24
GND_295 BB3
GND_296 BB30
GND_297 BB33
GND_298 BB37
GND_299 BB38
GND_300 BB5
SM-8450-1-MPSP1518-TR-03-0-AC
U3100-19
BB9 GND_301
C10 GND_302
C11 GND_303
C12 GND_304
C13 GND_305
C2 GND_306
C33 GND_307
C34 GND_308
C39 GND_309
C6 GND_310
D1 GND_311
D10 GND_312
D11 GND_313
D12 GND_314
D13 GND_315
D2 GND_316
D28 GND_317
D29 GND_318
D33 GND_319
D36 GND_320
D38 GND_321
D39 GND_322
D6 GND_323
E14 GND_324
E18 GND_325
E19 GND_326
E21 GND_327
E23 GND_328
E25 GND_329
E26 GND_330
E3 GND_331
E31 GND_332
E33 GND_333
E35 GND_334
E36 GND_335
E37 GND_336
E4 GND_337
E5 GND_338
E6 GND_339
E8 GND_340
E9 GND_341
F1 GND_342
F14 GND_343
F15 GND_344
F17 GND_345
F18 GND_346
F20 GND_347
F22 GND_348
F24 GND_349
F34 GND_350
GND_351 C1
GND_352 F37
GND_353 F38
GND_354 F39
GND_355 F4
GND_356 F5
GND_357 F8
GND_358 G11
GND_359 G13
GND_360 G15
GND_361 G16
GND_362 G19
GND_363 G21
GND_364 G23
GND_365 G25
GND_366 G27
GND_367 G29
GND_368 G3
GND_369 G31
GND_370 G34
GND_371 G35
GND_372 G36
GND_373 G39
GND_374 G6
GND_375 G7
GND_376 G9
GND_377 H1
GND_378 H10
GND_379 H12
GND_380 H14
GND_381 H18
GND_382 H24
GND_383 H26
GND_384 H28
GND_385 H30
GND_386 H32
GND_387 H34
GND_388 H37
GND_389 H4
GND_390 H8
GND_391 J11
GND_392 J13
GND_393 J15
GND_394 J16
GND_395 J17
GND_396 J25
GND_397 J27
GND_398 J29
GND_399 J3
GND_400 J31
SM-8450-1-MPSP1518-TR-03-0-AC
U3100-20
J33 GND_401
J37 GND_402
J38 GND_403
J39 GND_404
J7 GND_405
J9 GND_406
K1 GND_407
K10 GND_408
K12 GND_409
K14 GND_410
K16 GND_411
K18 GND_412
K2 GND_413
K24 GND_414
K26 GND_415
K28 GND_416
K3 GND_417
J36 GND_418
K30 GND_419
K32 GND_420
K34 GND_421
K37 GND_422
K4 GND_423
K8 GND_424
L11 GND_425
L13 GND_426
L15 GND_427
L17 GND_428
L19 GND_429
L21 GND_430
L23 GND_431
L25 GND_432
L27 GND_433
L29 GND_434
L3 GND_435
L31 GND_436
L33 GND_437
L37 GND_438
L9 GND_439
M1 GND_440
M10 GND_441
M12 GND_442
M14 GND_443
M16 GND_444
M18 GND_445
M20 GND_446
M22 GND_447
M24 GND_448
M28 GND_449
M30 GND_450
GND_451 M32
GND_452 M36
GND_453 M37
GND_454 M38
GND_455 M39
GND_456 M4
GND_457 M5
GND_458 M6
GND_459 M7
GND_460 M8
GND_461 N11
GND_462 N13
GND_463 N15
GND_464 N17
GND_465 N25
GND_466 N27
GND_467 N29
GND_468 N3
GND_469 N31
GND_470 N33
GND_471 N34
GND_472 N37
GND_473 N7
GND_474 N9
GND_475 P1
GND_476 P10
GND_477 P12
GND_478 P14
GND_479 P16
GND_480 P18
GND_481 P24
GND_482 P28
GND_483 P30
GND_484 P32
GND_485 P37
GND_486 P4
GND_487 P8
GND_488 R11
GND_489 R13
GND_490 R15
GND_491 R16
GND_492 R17
GND_493 R25
GND_494 R27
GND_495 R3
GND_496 R33
GND_497 R35
GND_498 R36
GND_499 R37
GND_500 R38
SM-8450-1-MPSP1518-TR-03-0-AC
U3100-21
R39 GND_501
R6 GND_502
R7 GND_503
R9 GND_504
T1 GND_505
T10 GND_506
T12 GND_507
T14 GND_508
T16 GND_509
T18 GND_510
T2 GND_511
T20 GND_512
T22 GND_513
T24 GND_514
T26 GND_515
T3 GND_516
T34 GND_517
T37 GND_518
T4 GND_519
T7 GND_520
T8 GND_521
U11 GND_522
U13 GND_523
U15 GND_524
U17 GND_525
U19 GND_526
U21 GND_527
U23 GND_528
U25 GND_529
U27 GND_530
U3 GND_531
U33 GND_532
U35 GND_533
U36 GND_534
U37 GND_535
U38 GND_536
U39 GND_537
U6 GND_538
U7 GND_539
U9 GND_540
V10 GND_541
V12 GND_542
V14 GND_543
V16 GND_544
V18 GND_545
V20 GND_546
V22 GND_547
V24 GND_548
V26 GND_549
V28 GND_550
GND_551 V30
GND_552 V32
GND_553 V37
GND_554 V4
GND_555 V5
GND_556 V6
GND_557 V7
GND_558 V8
GND_559 W11
GND_560 W13
GND_561 W15
GND_562 W17
GND_563 W19
GND_564 W21
GND_565 W23
GND_566 W25
GND_567 W27
GND_568 W29
GND_569 W31
GND_570 W33
GND_571 W34
GND_572 W36
GND_573 W37
GND_574 W38
GND_575 W39
GND_576 W6
GND_577 W7
GND_578 W9
GND_579 Y10
GND_580 Y12
GND_581 Y14
GND_582 Y16
GND_583 Y18
GND_584 Y20
GND_585 Y22
GND_586 Y24
GND_587 Y26
GND_588 Y28
GND_589 Y30
GND_590 Y32
GND_591 Y34
GND_592 Y4
GND_593 Y5
GND_594 Y6
GND_595 Y8
SM-8450-1-MPSP1518-TR-03-0-AC
Title
L2_MAIN
Size A3
Document Number
SM8450 GND
Rev P0
Date: Tuesday, October 19, 2021
Sheet 41 79

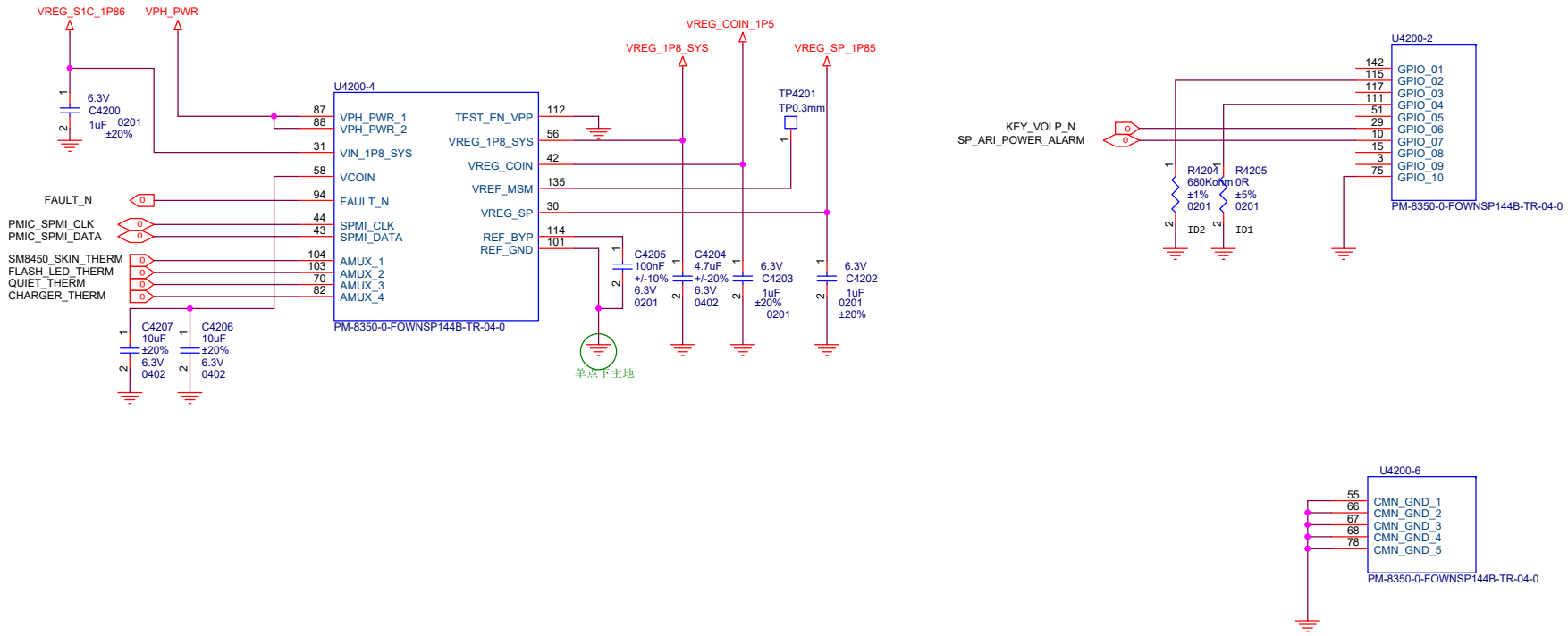

Title	L2_MAIN	
Size A3	Document Number PM8350 XO&CTRL	Rev P0
Date: Tuesday, October 19, 2021	Sheet	

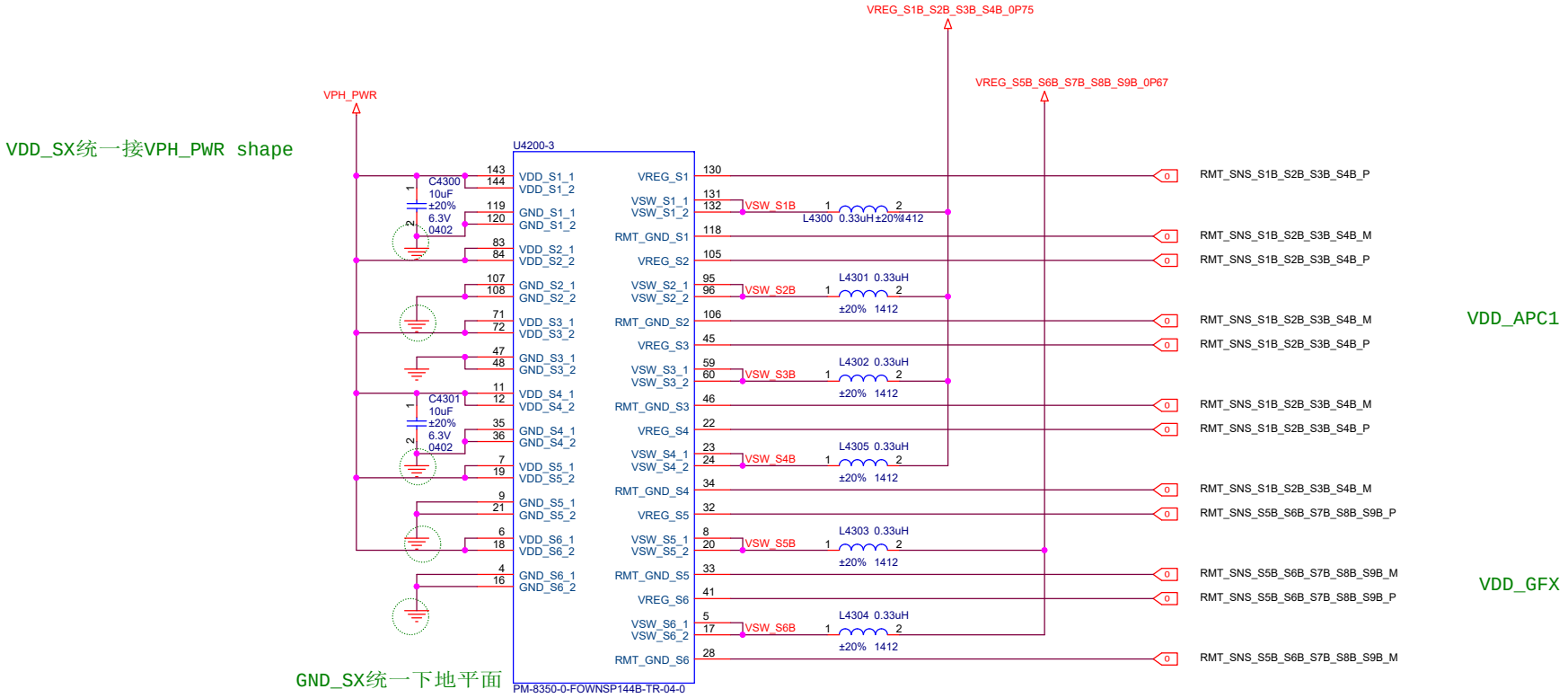

Title	L2_MAIN	
Size A3	Document Number PM8350 BUCK CONVERTER1	Rev P0
Date: Tuesday, October 19, 2021	Sheet 43	

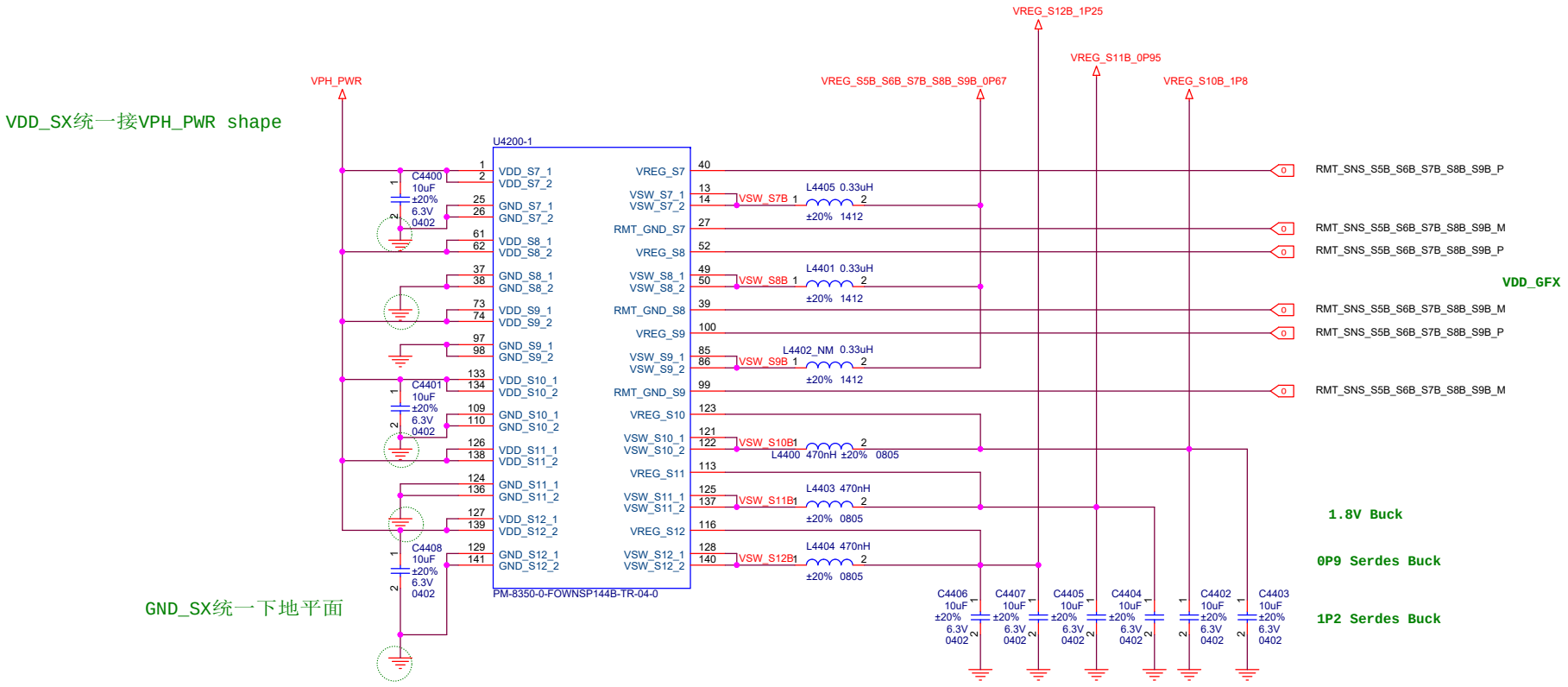

Title	L2_MAIN	
Size A3	Document Number PM8350 BUCK CONVERTER2	Rev P0
Date: Tuesday, October 19, 2021	Sheet 44	79

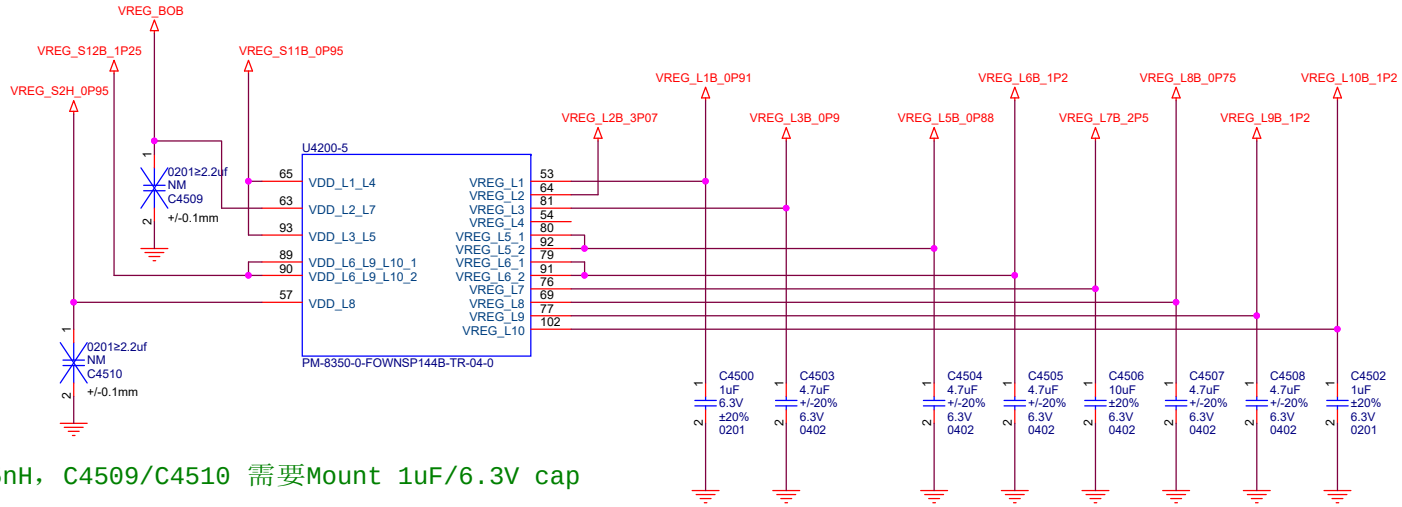

输入ESL大于15nH，C4509/C4510 需要Mount 1uF/6.3V cap

LDO	Irate (ma)	Default On Voltage(V)	Working Voltage			Net Name	Capless	Cout(uf)
			Min	Normal	Max			
L1B	300	0.912	0.82	0.88	0.92	USB_SS_DP	NO	1~10
L2B	150	3.072	2.97	3.072	3.3	USB PHY, USB_HS_3P1	YES	0.47~5
L3B	1200	0.904	0.56	0.904	0.97	LPDDR5_VDD2L	NO	4.7~22
L4B	300	-- --	0.32	TBD	1.304	Not used	NO	1~10
L5B	1200	0.88	TBD	TBD	TBD	SM8450 analog	NO	4.7~22
L6B	1200	1.2	TBD	TBD	TBD	SM8450 VDD analog	NO	4.7~22
L7B	600	2.504	TBD	TBD	TBD	UFS0_VCC	YES	4.7~23.5
L8B	1200	0.824	TBD	0.752	TBD	LPI_CX	NO	4.7~22
L9B	1200	1.2	TBD	TBD	TBD	PX10, UFS_VCCQ	NO	4.7~22
L10B	300	1.2	TBD	TBD	TBD	PMK8450 VDD_Active	NO	1~10

Title	L2_MAIN	
Size A3	Document Number PM8350 LDOs	Rev P0
Date: Wednesday, October 20, 2021	Sheet	

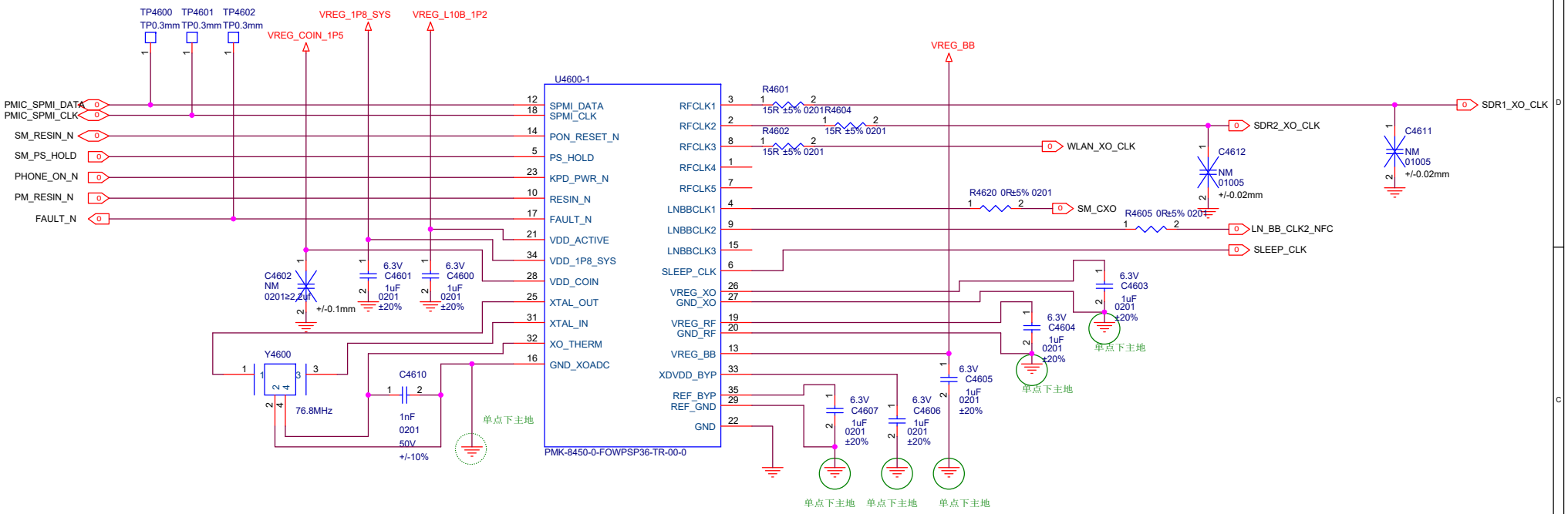

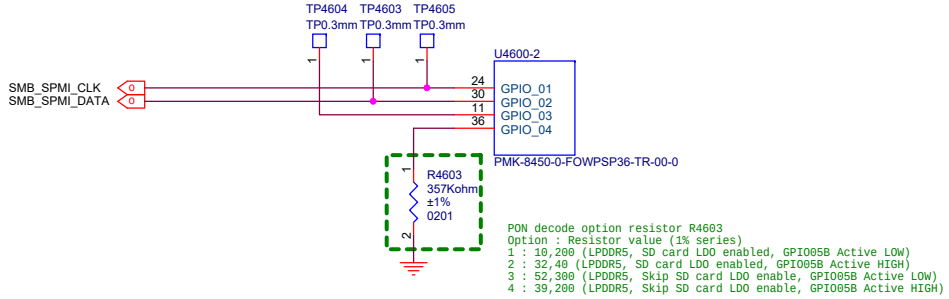

Title	L2_MAIN	
Size A3	Document Number PMK8450	Rev P0
Date: Wednesday, October 20, 2021	Sheet 46	79

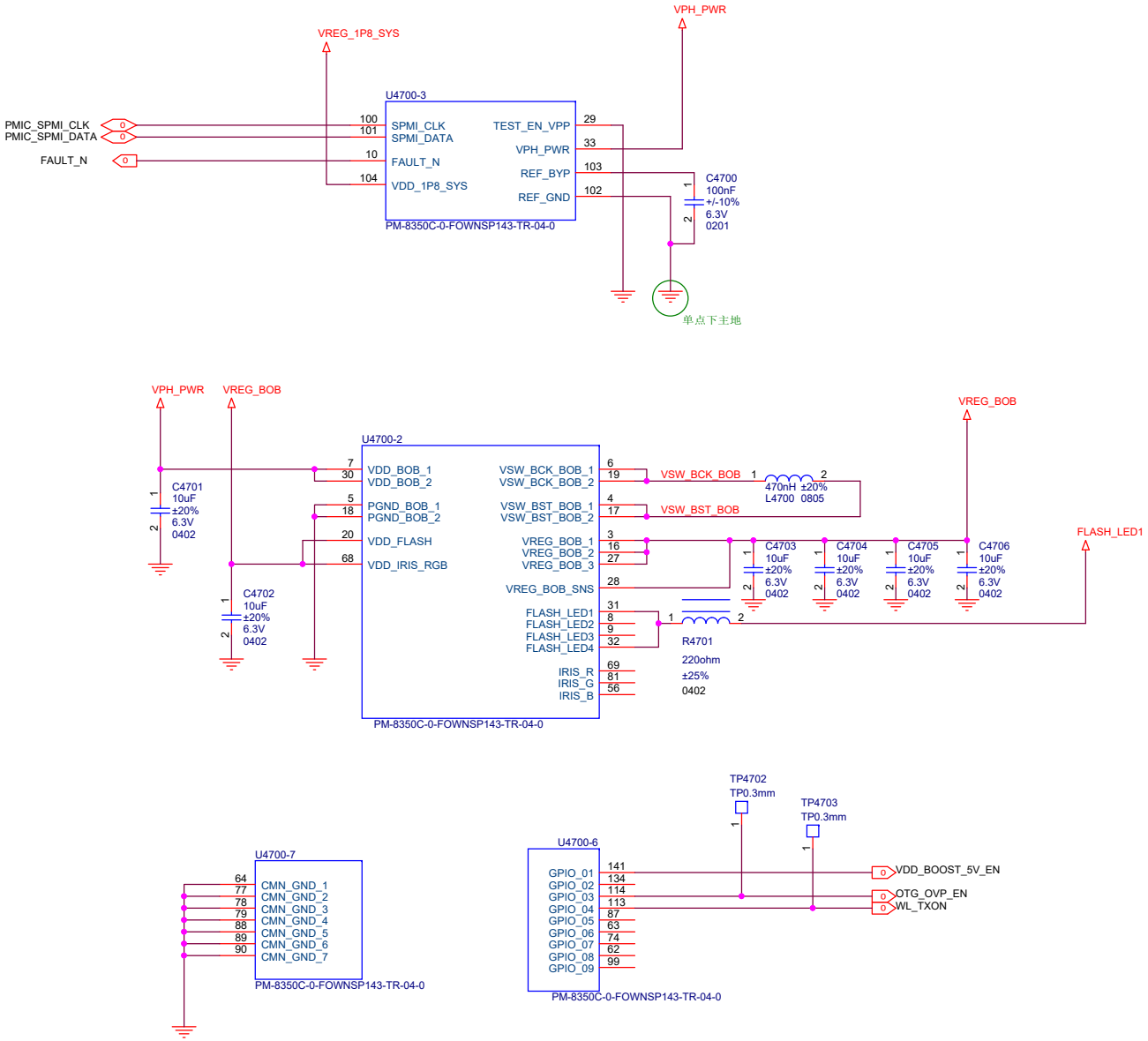

Title	L2_MAIN	
Size A3	Document Number PM8350C CTRL&GND	Rev P0
Date: Tuesday, October 19, 2021	Sheet 47	79

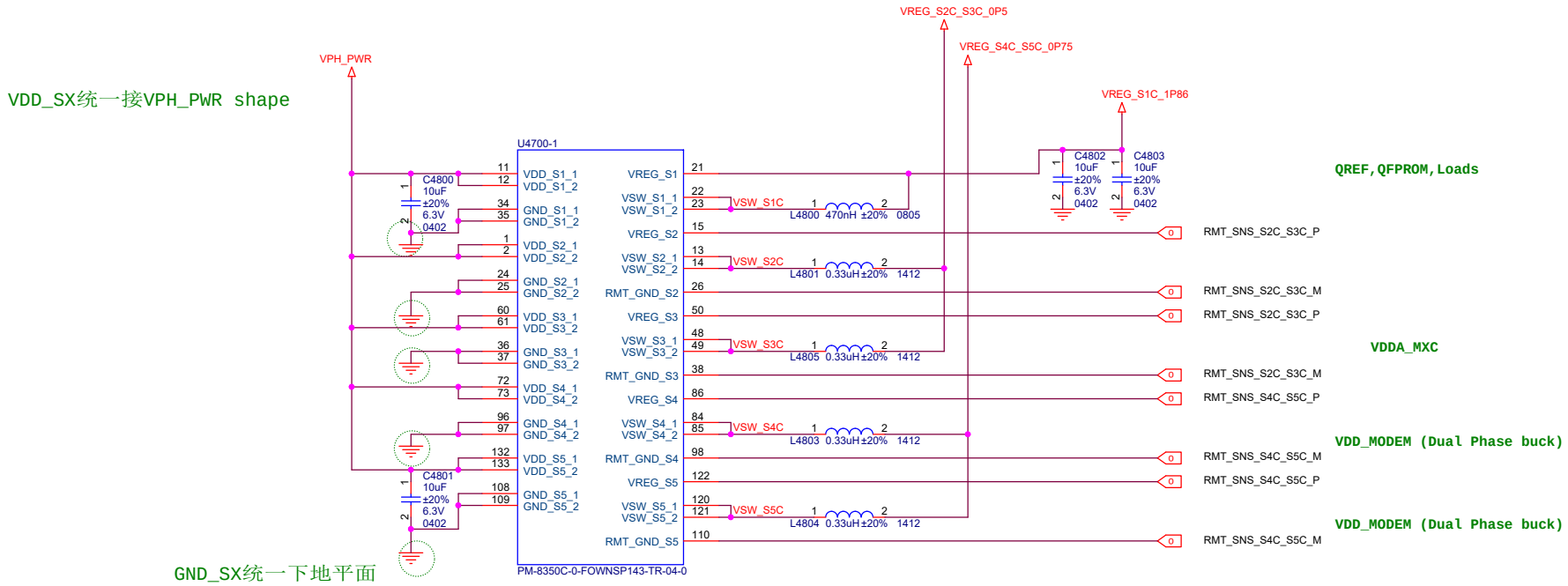

Title	L2_MAIN	
Size A3	Document Number PM8350C BUCK CONVERTER1	Rev P0
Date: Wednesday, October 20, 2021	Sheet 48	79

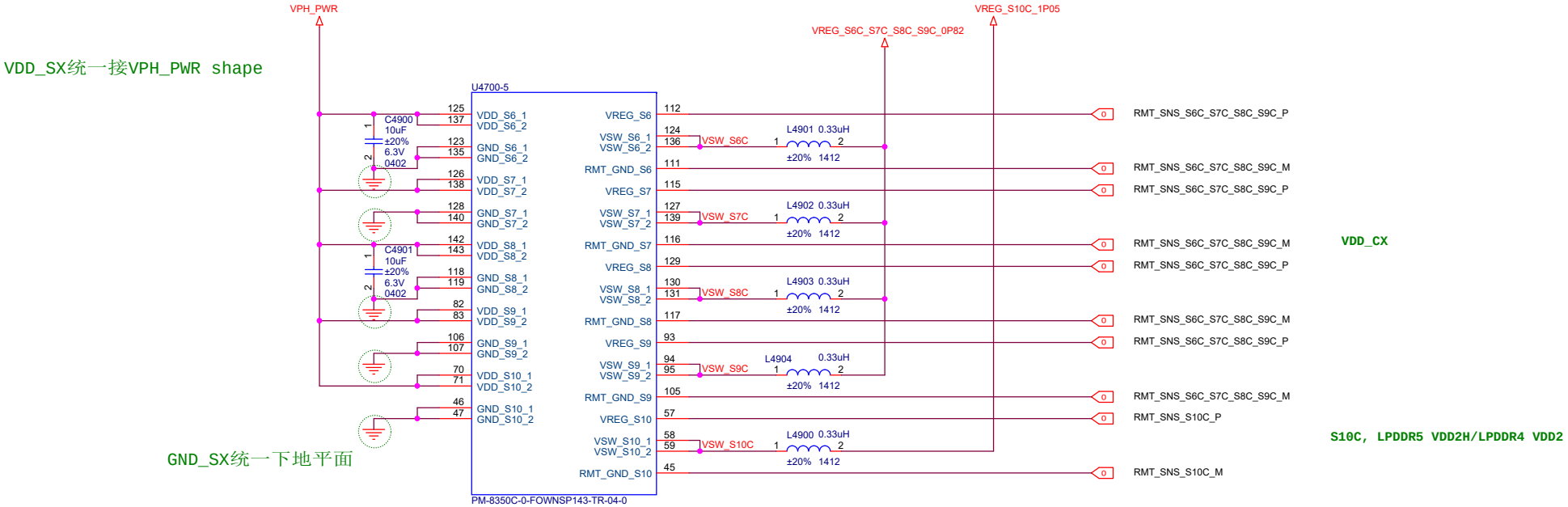

Title	L2_MAIN	
Size A3	Document Number PM8350C BUCK CONVERTER2	Rev P0
Date: Wednesday, October 20, 2021	Sheet	

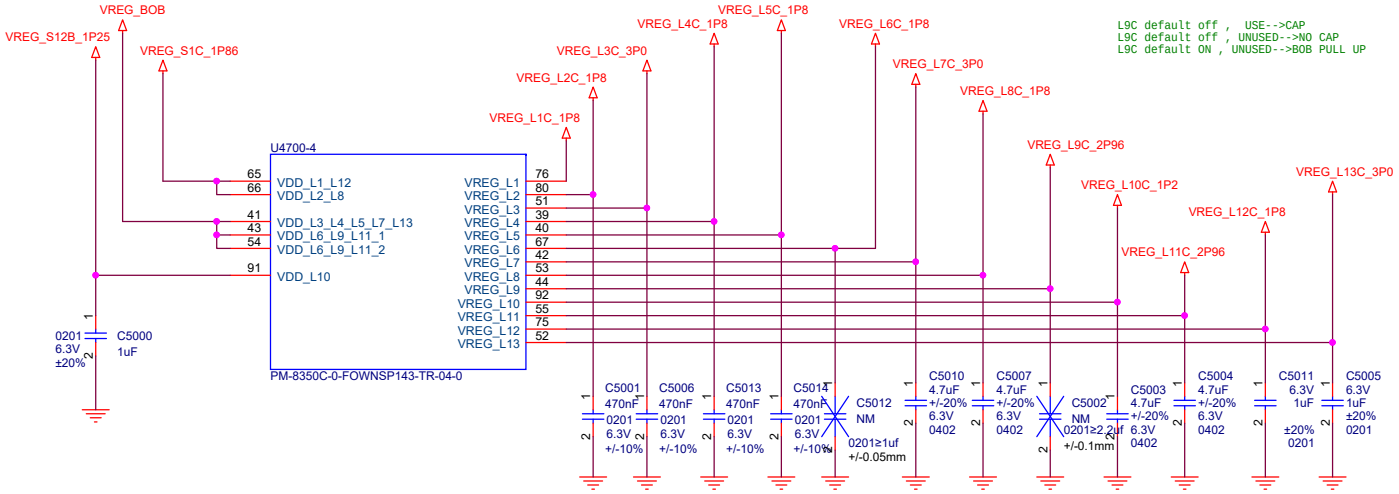

LDO	Irate (ma)	Default On Voltage(V)	Working Voltage Min	Normal	Max	Net Name	Capless	Cout(uf)
L1C	150	1.8	1.6	1.8	1.98	USB2_1P8	YES	1~5
L2C	150	-- --	1.6	1.8	1.98	TP_VDDIO	YES	1~5
L3C	150	-- --	2.7	3.296	3.6	Sar Sensor	YES	0.47~5
L4C	150	-- --	1.65	1.808	3.3	SIM1	YES	0.47~5
L5C	150	-- --	1.65	1.808	3.3	SIM2	YES	0.47~5
L6C	150	1.8	1.76	1.8	1.84	PX2(兼容）	YES	0.47~5
L7C	600	-- --	3.0	3.008	3.6	TP 3.0	YES	4.7~23.5
L8C	600	-- --	1.71	1.8	1.95	Sensor	YES	4.7~23.5
L9C	600	2.96	2.7	2.96	3.6	SD Card(Not used)	YES	4.7~23.5
L10C	1200	-- --	0.99	1.2	1.25	OLED_VDD1P2	NO	4.7~22
L11C	600	-- --	TBD	2.504	TBD	FOD	YES	4.7~23.5
L12C	150	-- --	1.65	1.8	1.95	OLED_VDD1P8	YES	1~5
L13C	150	-- --	2.65	3.0	3.544	OLED_VCC3P0	YES	0.47~5

Title	L2_MAIN	
Size A3	Document Number PM8350C LDOs	Rev P0
Date: Wednesday, October 20, 2021	Sheet 50	79

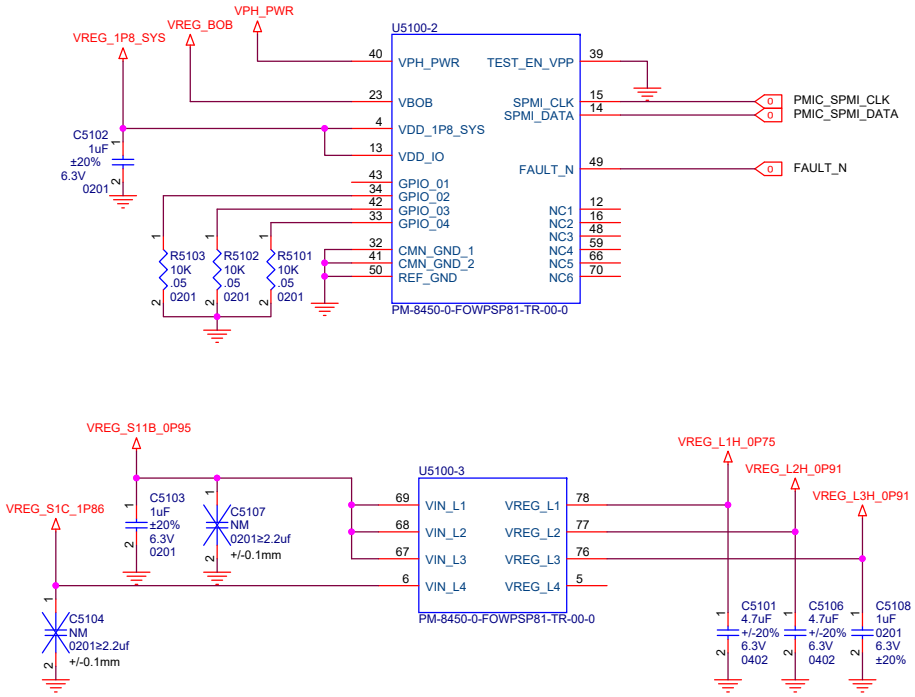

LDO	Irate (ma)	Default On Voltage(V)	Working Voltage			Net Name	Capless	Cout(uf)
			Min	Normal	Max			
L1H	1200	0.824	0.75	0.75	0.83	LPI_MX/NAV	NO	4.7~22
L2H	1200	0.912	0.87	0.91	0.93	BB QLink0/1/2,PCIe1	NO	4.7~22
L3H	400	0.912	0.87	0.91	0.96	Caster QL 9L	NO	2.2~10
L4H	300	1.808	1.504	TBD	2.0	Not used	YES	1~10

Title	SM8450	
Size A3	Document Number PM8450 HK IO&LDO	Rev P0
Date: Wednesday, October 20, 2021	Sheet 51	80

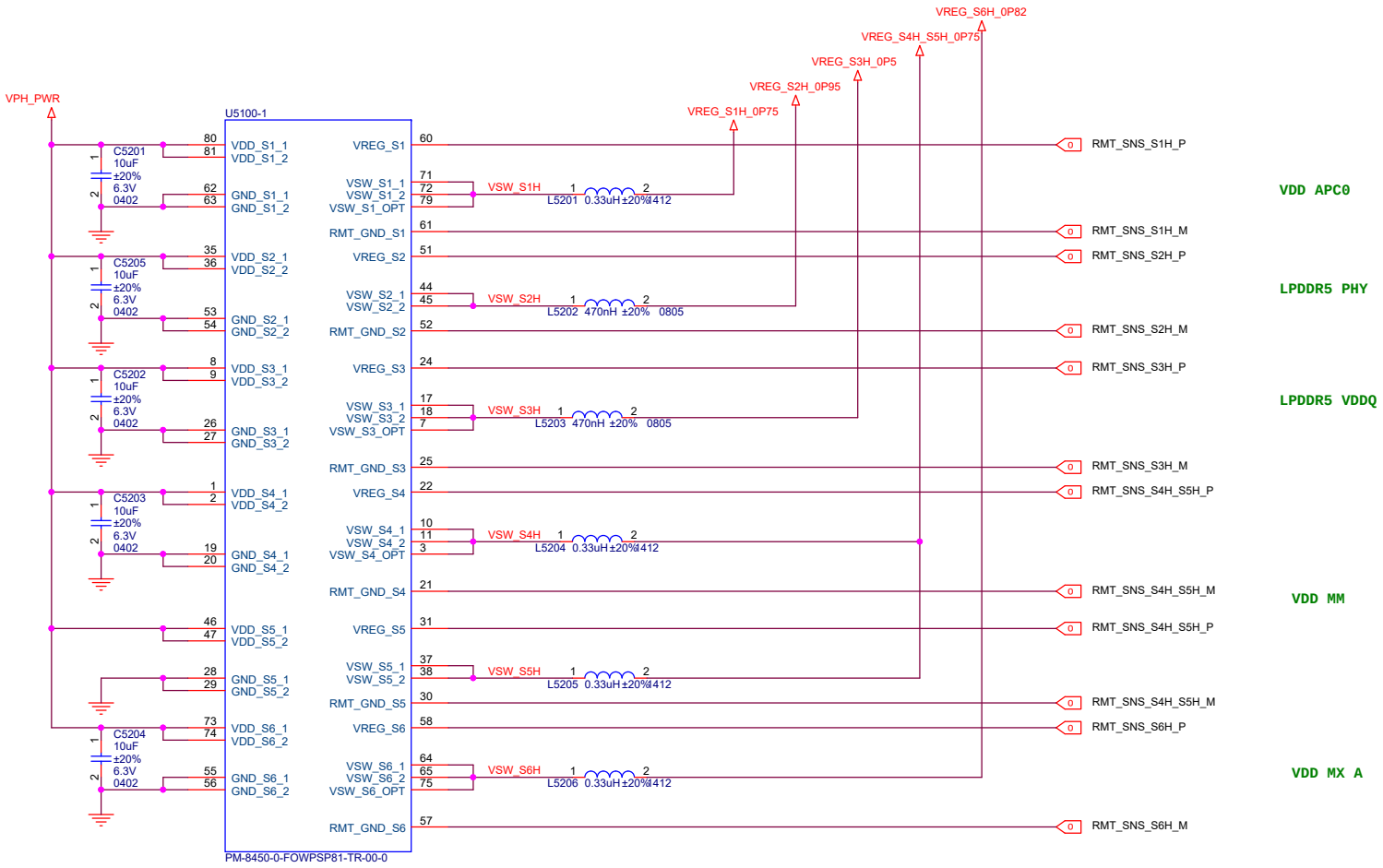

Title	L2_MAIN	
Size A3	Document Number PM8450 BUCK CONVERTER	Rev P0
Date: Wednesday, October 20, 2021	Sheet 52	79

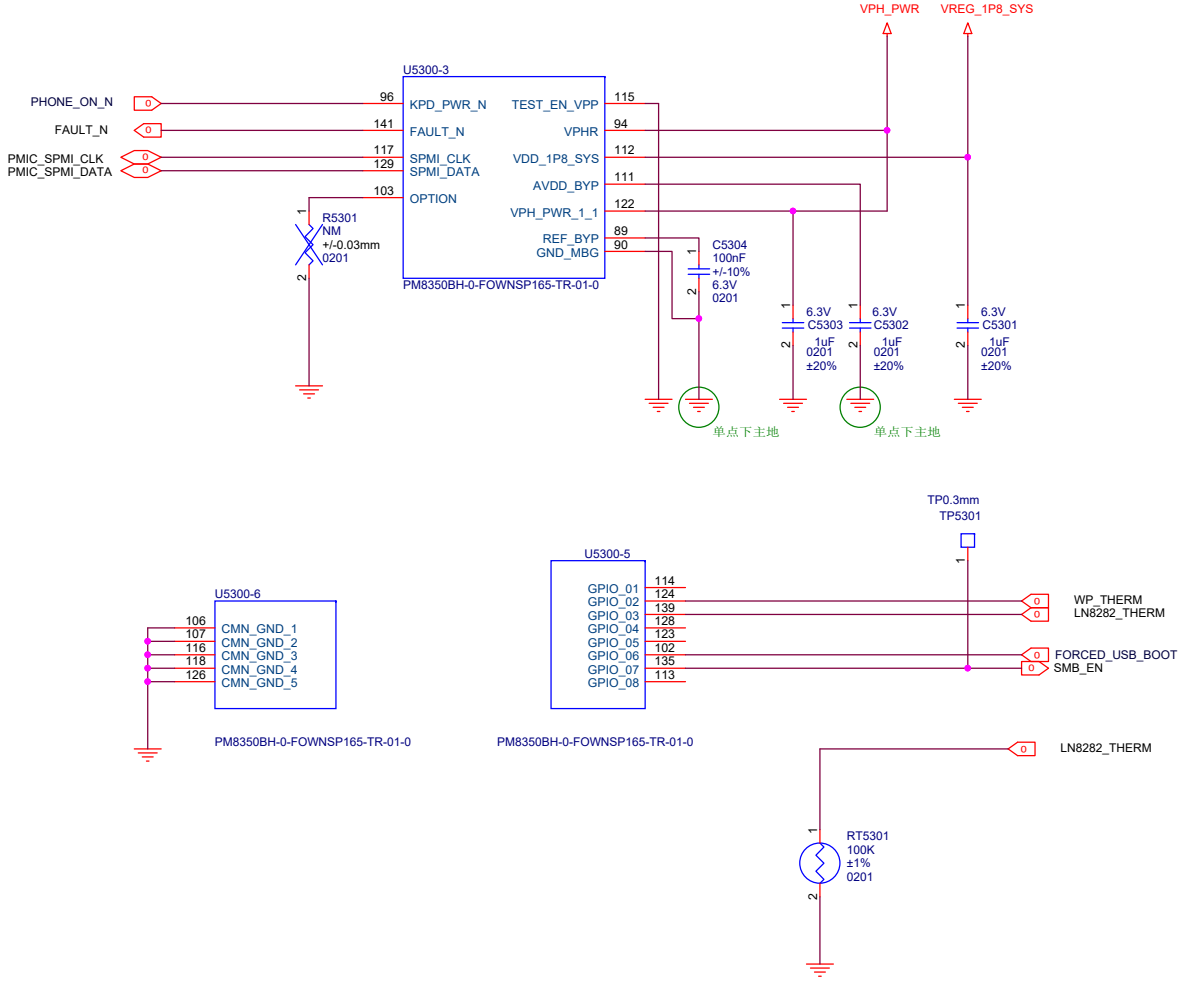

Title	L2_MAIN	
Size A3	Document Number PM8350B CTRL&GND	Rev P0
Date: Tuesday, October 19, 2021	Sheet	

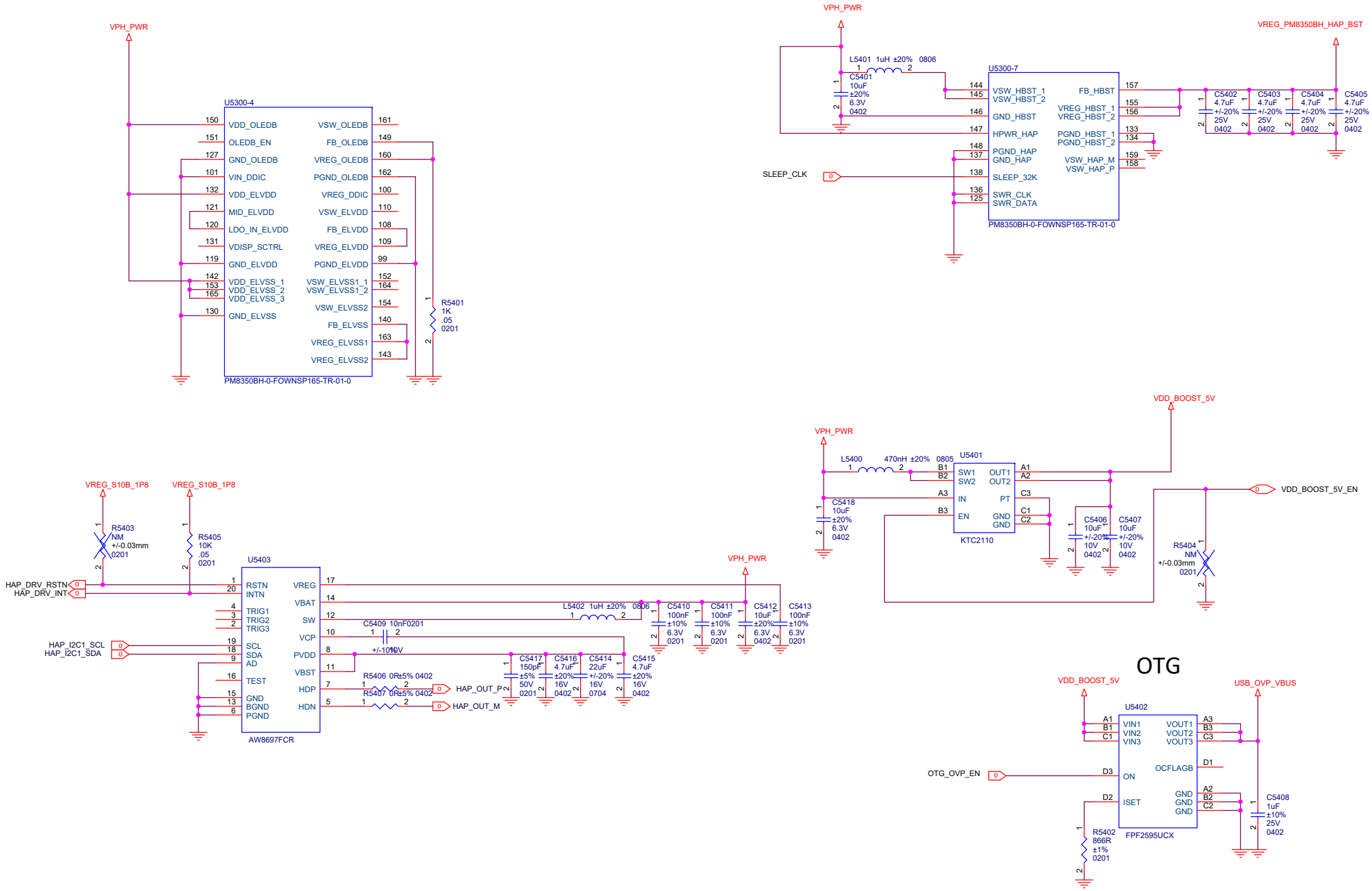

Title	L2_MAIN	
Size A3	Document Number PM8350B HAPTIC&OLED	Rev P0
Date: Wednesday, October 20, 2021	Sheet 54 of 79	

PM8350B---1S BATTERY ,low voltage VIBRATOR DRIVER
PM8350BH---1S BATTERY ,high voltage VIBRATOR DRIVER
PM8350BHS---2S BATTERY ,high voltage VIBRATOR DRIVER

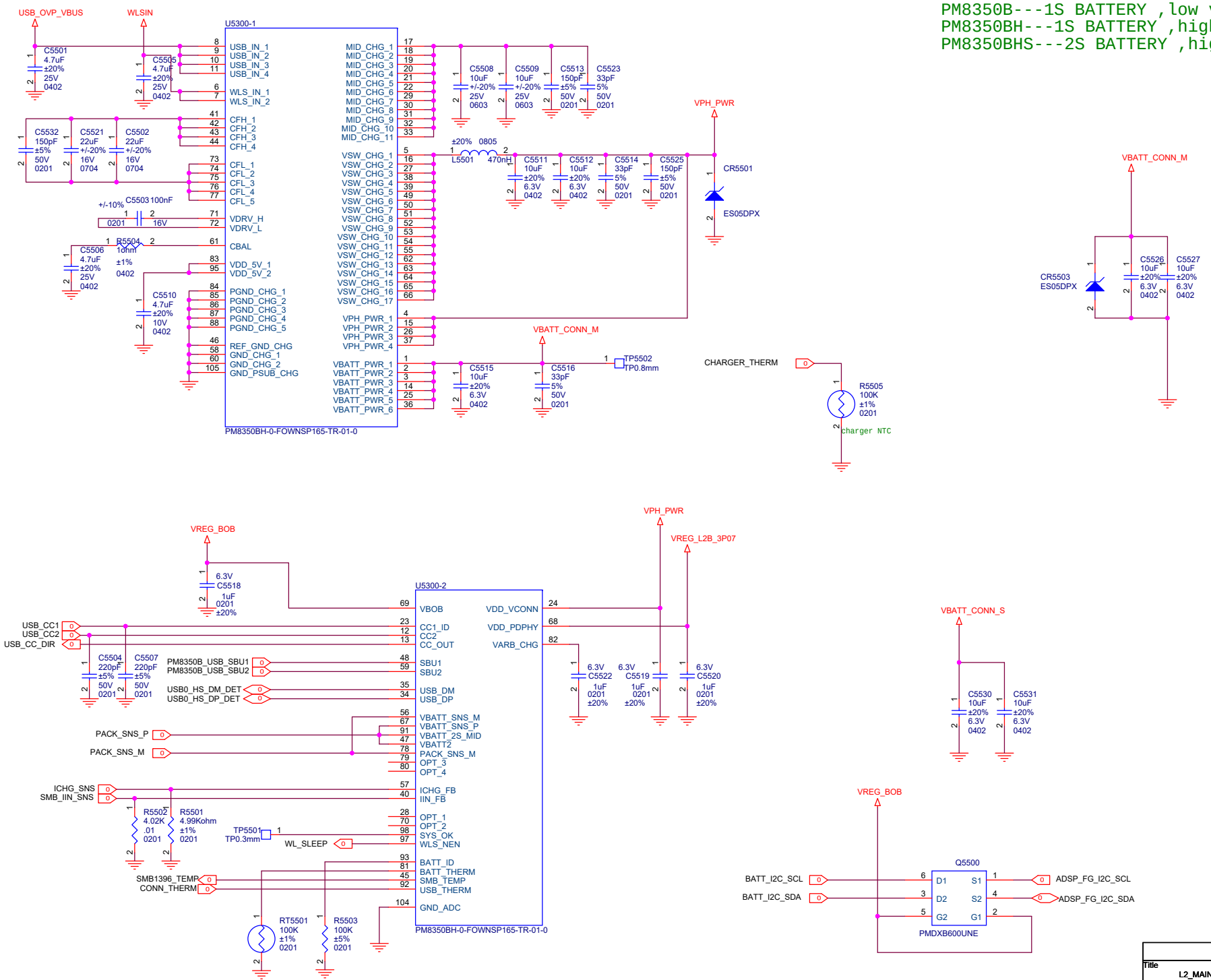

Title	L2_MAIN	
Size A3	Document Number PM8350B Charger	Rev P0
Date: Tuesday, October 19, 2021	Sheet 55	79

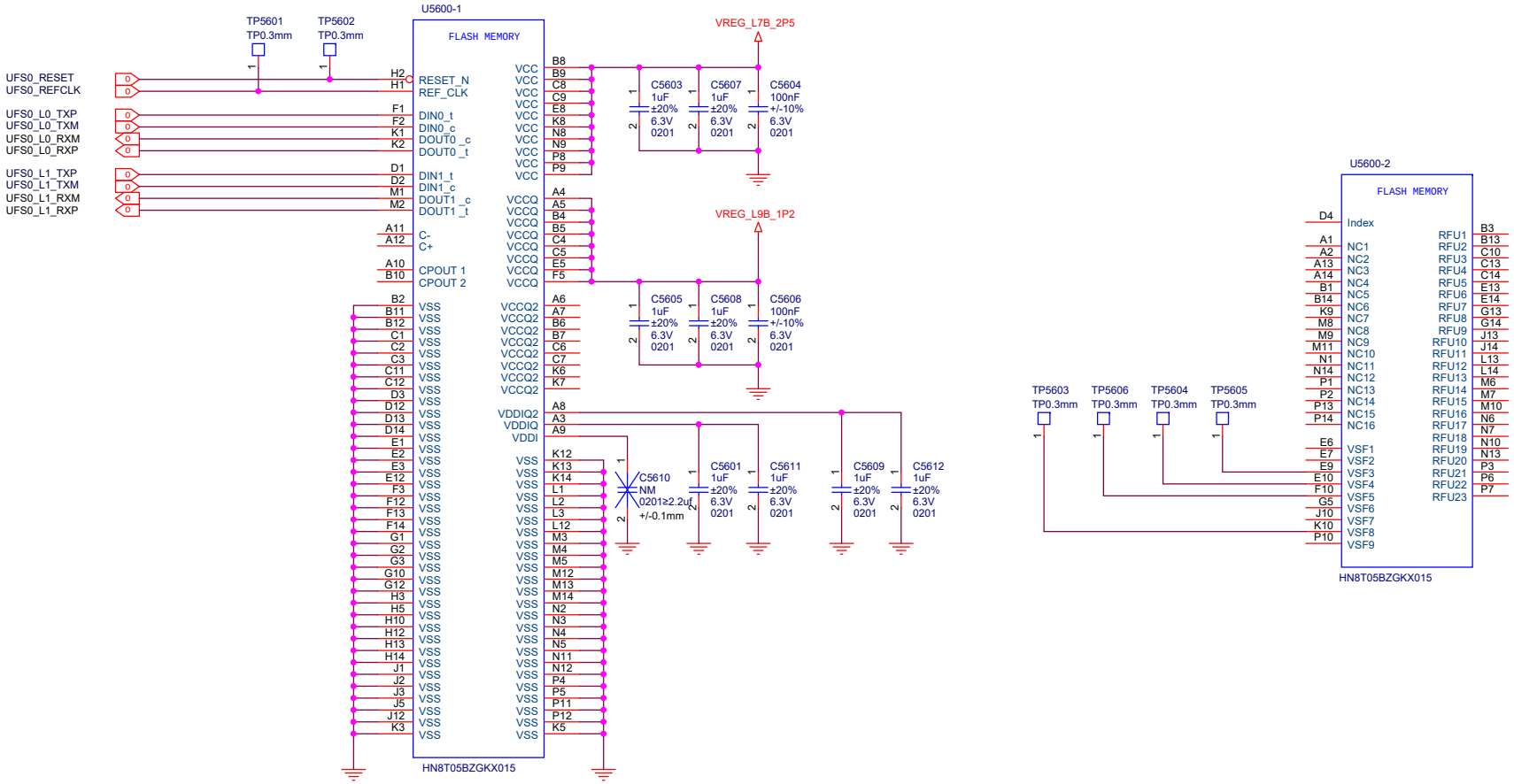

Title	L2_MAIN	
Size A3	Document Number MEMORY	Rev P0
Date: Wednesday, October 20, 2021	Sheet 56	79

Title	L2_MAIN
Size A3	Document Number MEMORY-2
Rev	P0
Date:	Tuesday, October 19, 2021
Sheet	

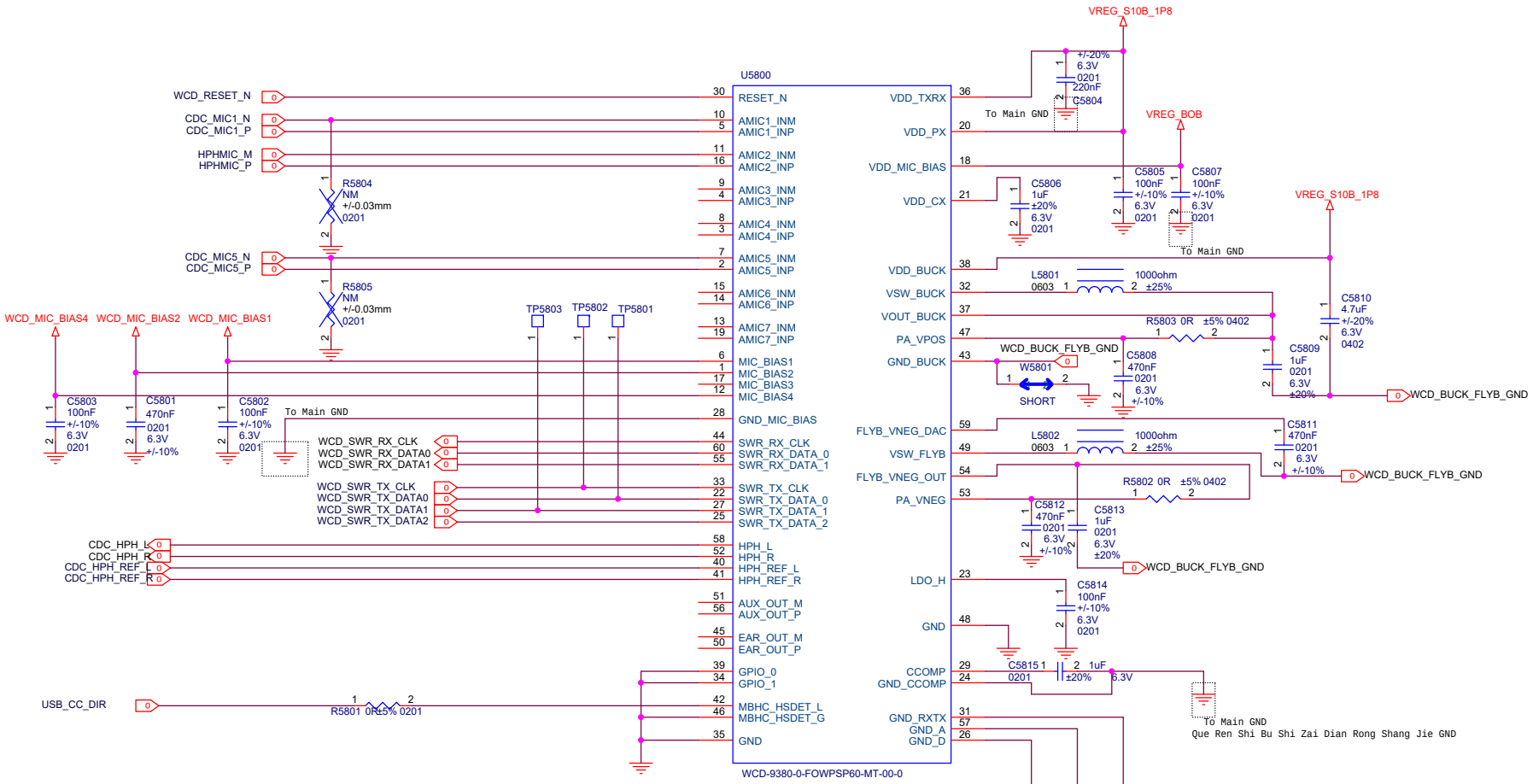

NOTE 1: ROUTE AN ISOLATED GROUND TRACE FROM CCOMP_REF TO THE CAP GROUND, THEN VIA TO THE MAIN GROUND PLANE
NOTE 2: PLACE VDD_BUCK CAP AS CLOSE TO CHIP EDGE AS POSSIBLE AND MINIMIZE LOOP INDUCTANCE
NOTE 3: USE SHORT AND WIDE TRACES FOR BUCK AND FLYBACK RELATED NETS
NOTE 4: ANALOG MIC INPUTS SHOULD BE ISOLATED WITH GROUND FROM NOISY OR SWITCHING SIGNALS AND SUPPLIES

Title	L2_MAIN	
Size A3	Document Number WCD9380	Rev P0
Date: Tuesday, October 19, 2021	Sheet	

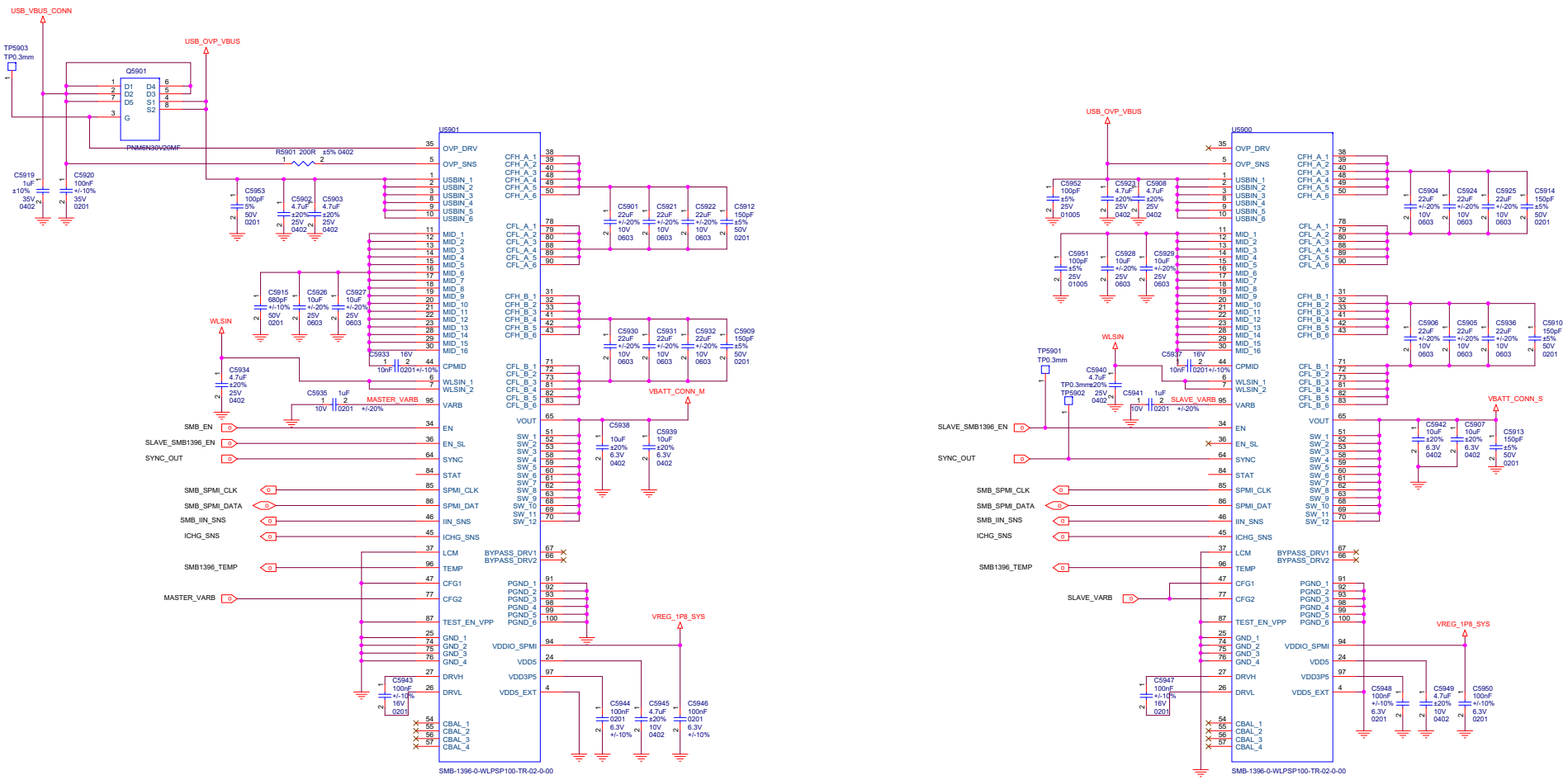

Title	L2_MAIN	
Size A2	Document Number BQ25968	Rev P0
Date: Wednesday, October 20, 2021	Sheet	

HEADSET

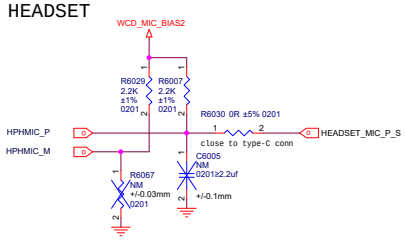

R6029、R6004、C6005靠近WCD9385（U5800）端放置

AUX MIC

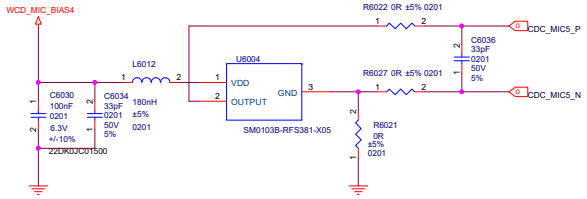

SPKR PA

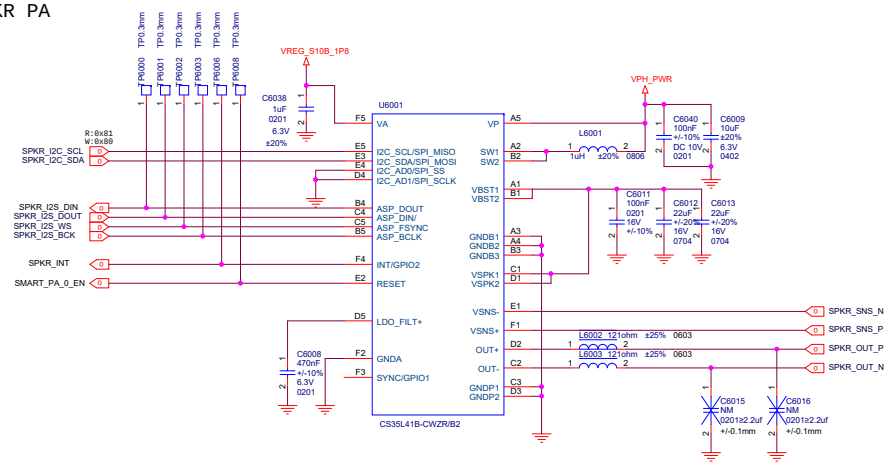

SPKR PA

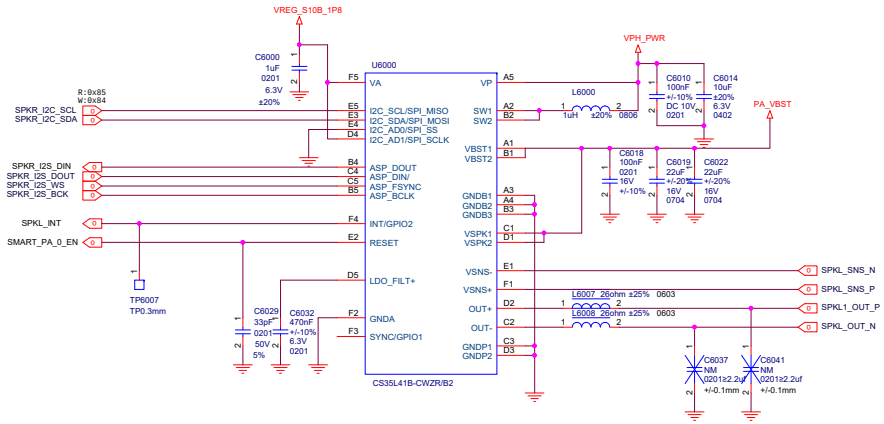

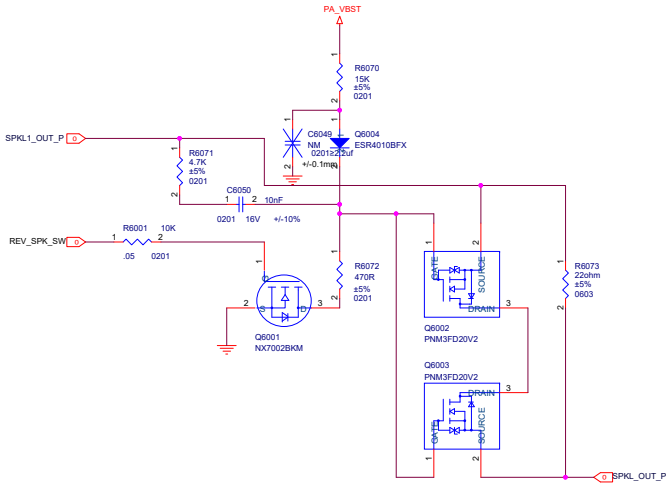

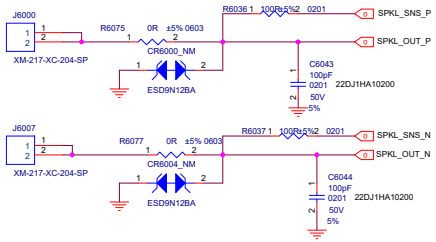

Title	8350 EVB		
Size A2	Document Number AUDIO		Rev P0
Date: Wednesday, October 20, 2021	Sheet 60 of 83		

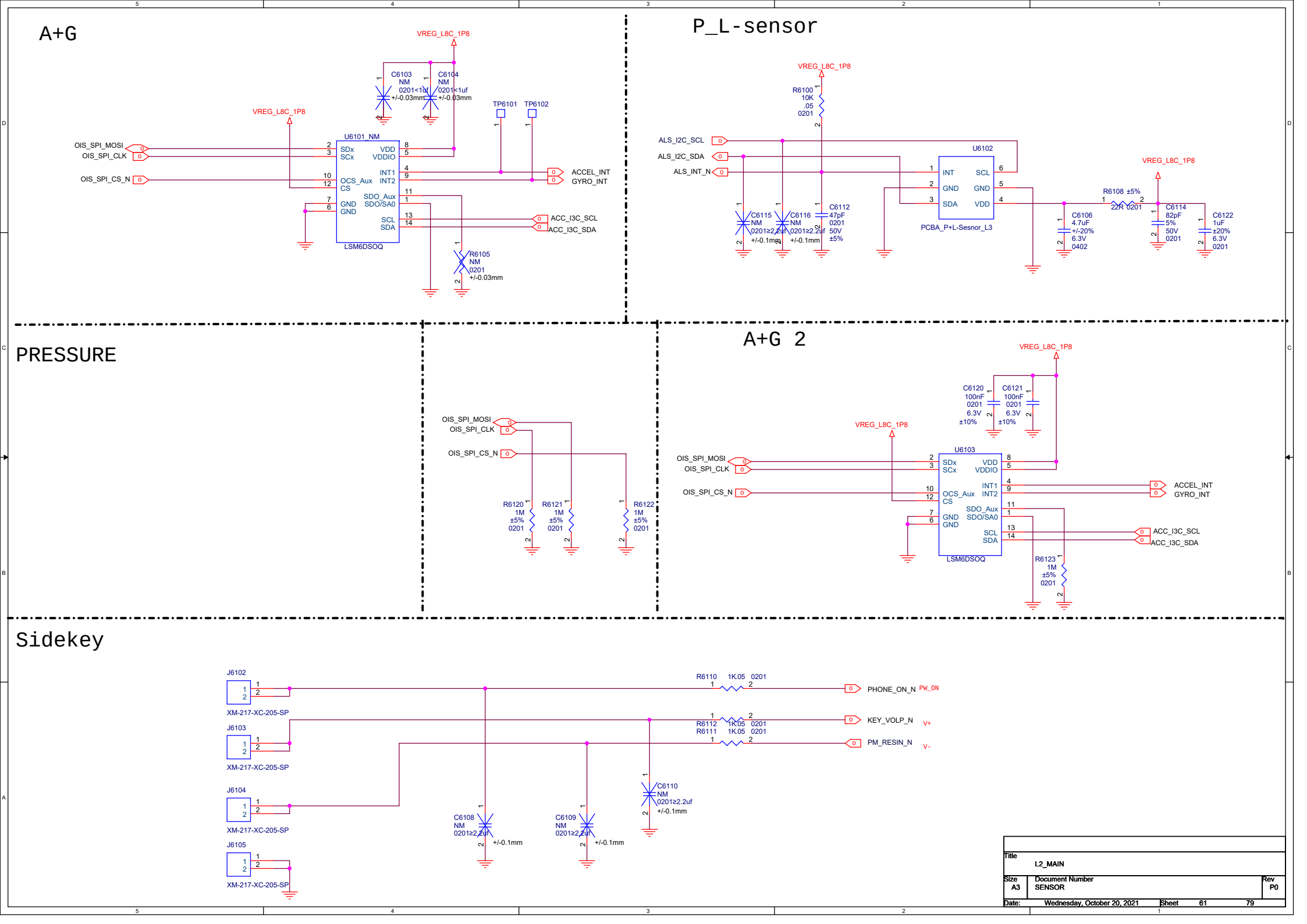
A+G
VREG_L8C_1P8
C6103 NM 0201<1uf +/-0.03mm
C6104 NM 0201<1uf +/-0.03mm
TP6101
TP6102
U6101_NM
OIS_SPI_MOSI
OIS_SPI_CLK
OIS_SPI_CS_N
SDx
SCx
OCS_Aux
CS
GND
GND
VDD
VDDIO
INT1
INT2
SDO_Aux
SDO/SA0
SCL
SDA
ACCEL_INT
GYRO_INT
ACC_I3C_SCL
ACC_I3C_SDA
LSM6DSOQ
R6105 NM 0201 +/-0.03mm
P_L-sensor
VREG_L8C_1P8
R6100 10K .05 0201
ALS_I2C_SCL
ALS_I2C_SDA
ALS_INT_N
U6102
INT
GND
SDA
SCL
GND
VDD
PCBA_P+L-Sesnor_L3
C6115 NM 0201≥2.2uf +/-0.1mm
C6116 NM 0201≥2.2uf +/-0.1mm
C6112 47pF 0201 50V ±5%
C6106 4.7uF +/-20% 6.3V 0402
R6108 ±5% 22R 0201
C6114 82pF 5% 50V 0201
C6122 1uF ±20% 6.3V 0201
PRESSURE
OIS_SPI_MOSI
OIS_SPI_CLK
OIS_SPI_CS_N
R6120 1M ±5% 0201
R6121 1M ±5% 0201
R6122 1M ±5% 0201
A+G 2
VREG_L8C_1P8
C6120 100nF 0201 6.3V ±10%
C6121 100nF 0201 6.3V ±10%
U6103
OIS_SPI_MOSI
OIS_SPI_CLK
OIS_SPI_CS_N
SDx
SCx
OCS_Aux
CS
GND
GND
VDD
VDDIO
INT1
INT2
SDO_Aux
SDO/SA0
SCL
SDA
ACCEL_INT
GYRO_INT
ACC_I3C_SCL
ACC_I3C_SDA
LSM6DSOQ
R6123 1M ±5% 0201
Sidekey
J6102
XM-217-XC-205-SP
J6103
XM-217-XC-205-SP
J6104
XM-217-XC-205-SP
J6105
XM-217-XC-205-SP
R6110 1K.05 0201
PHONE_ON_N
PW_ON
R6112 1K.05 0201
R6111 1K.05 0201
KEY_VOLP_N
V+
PM_RESIN_N
V-
C6108 NM 0201≥2.2uf +/-0.1mm
C6109 NM 0201≥2.2uf +/-0.1mm
C6110 NM 0201≥2.2uf +/-0.1mm
Title
L2_MAIN
Size A3
Document Number SENSOR
Rev P0
Date: Wednesday, October 20, 2021
Sheet 61 79

COMPASS

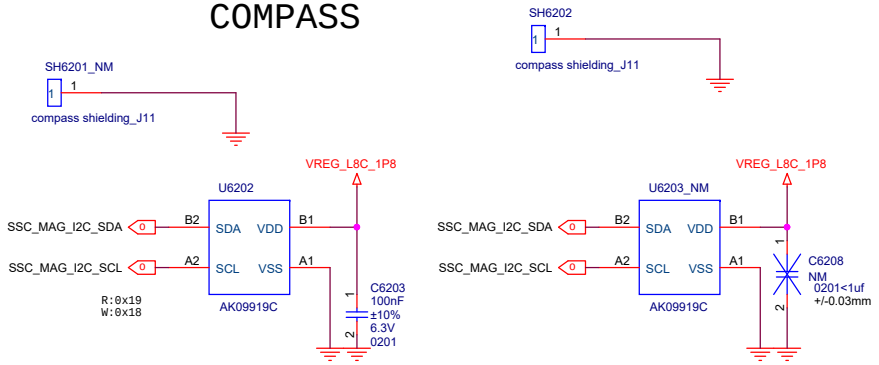

INFRARED

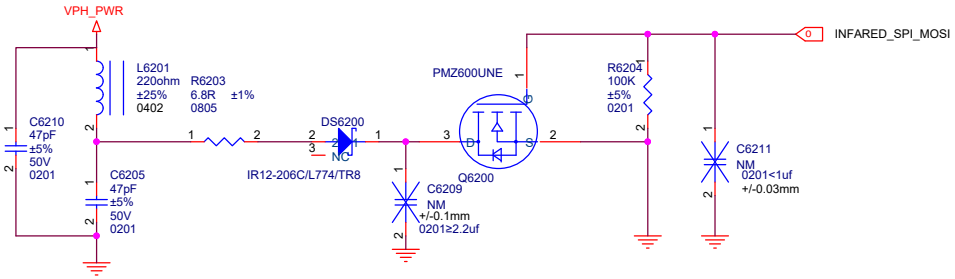

Title	L2_MAIN	
Size A3	Document Number SENSOR-2	Rev P0
Date: Wednesday, October 20, 2021	Sheet 62	79

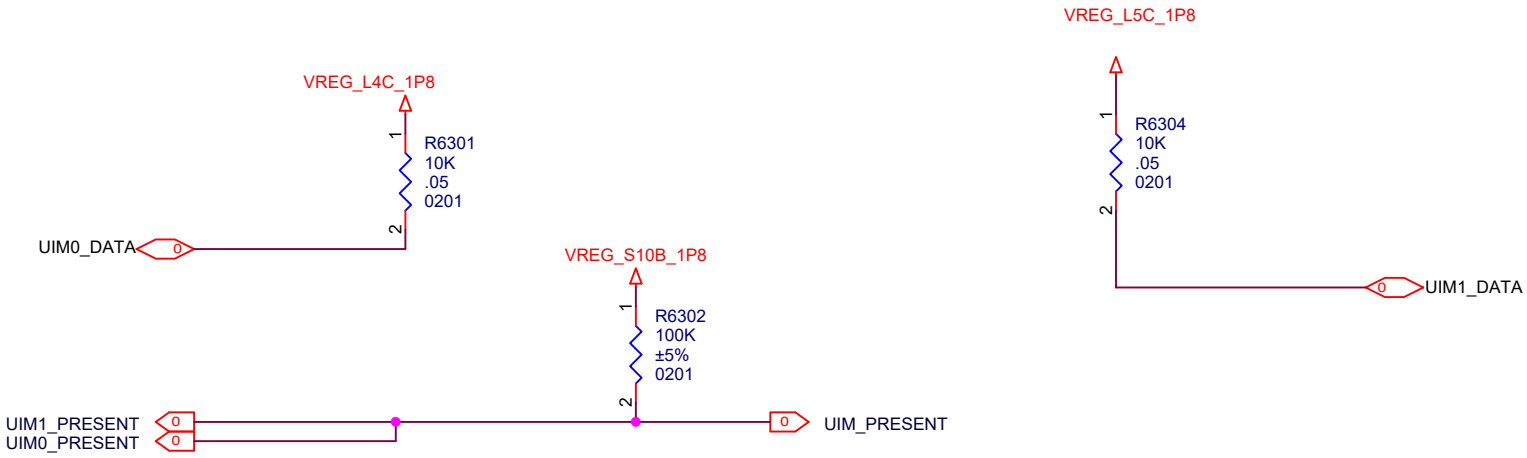

Title	L2_MAIN	
Size A4	Document Number SIM	Rev P0
Date: Tuesday, October 19, 2021	Sheet 63 of 79	

Title	L2_MAIN		
Size A2	Document Number AMOLED		Rev P0
Date: Tuesday, October 19, 2021		Sheet	

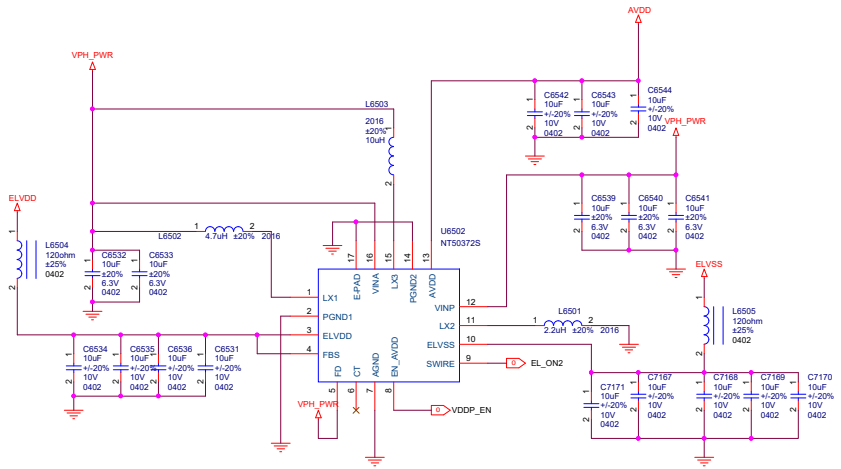

Title	L2_MAIN		
Size A2	Document Number BTB		Rev P0
Date: Tuesday, October 19, 2021		Sheet	

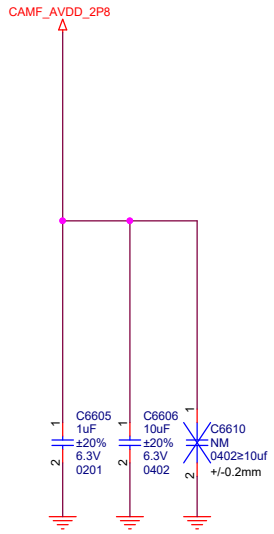

Title	L2_MAIN	
Size A3	Document Number FRONT CAMERA	Rev P0
Date: Wednesday, October 20, 2021	Sheet 66	79

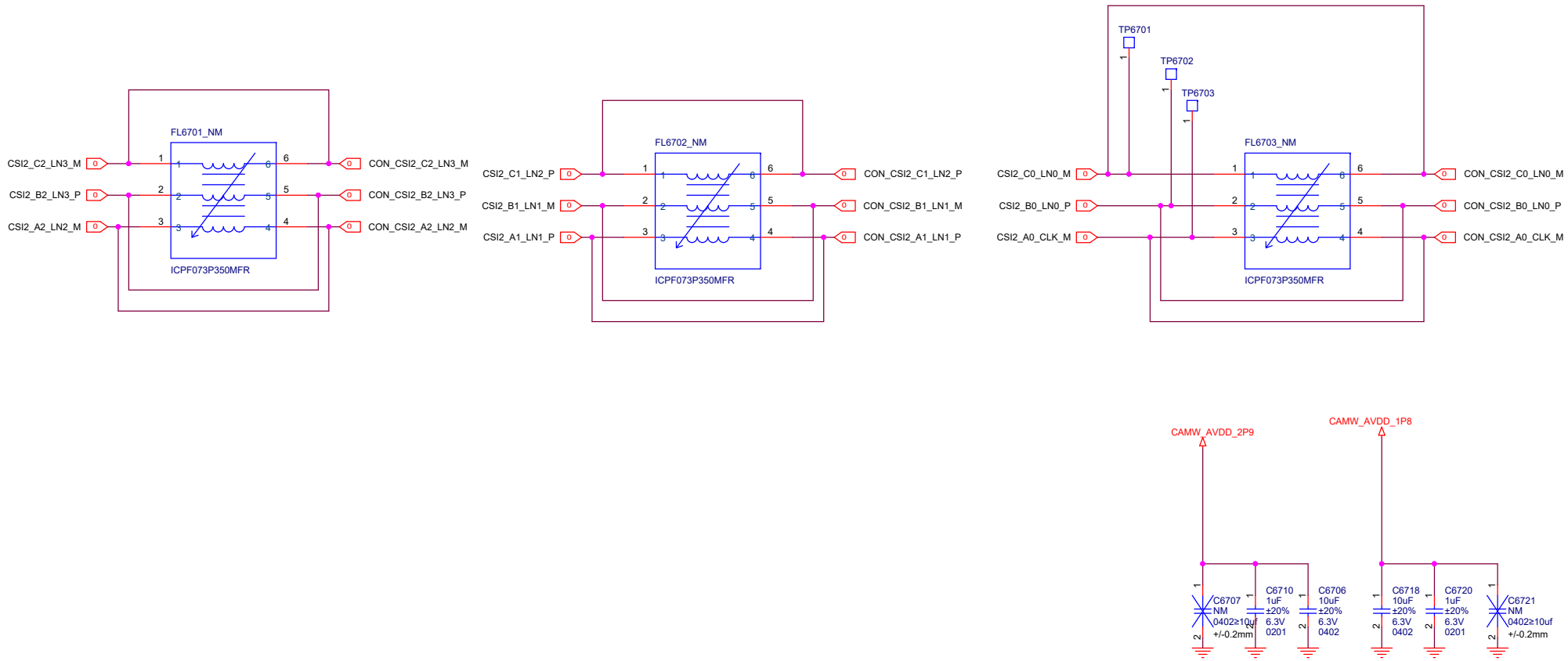

Title	L2_MAIN	
Size A3	Document Number WIDE&TELE CAMERA	Rev P0
Date: Wednesday, October 20, 2021	Sheet 67	79

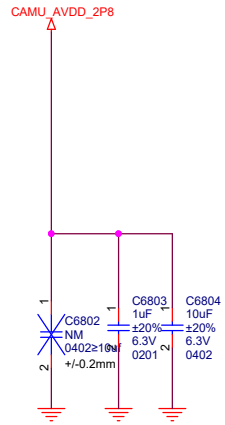

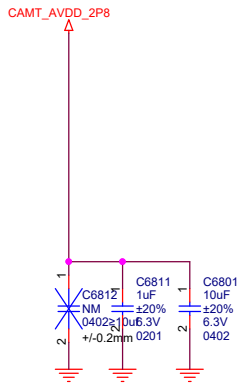

Title	L2_MAIN	
Size A3	Document Number ULTRA CAMERA	Rev P0
Date: Wednesday, October 20, 2021	Sheet 68	79

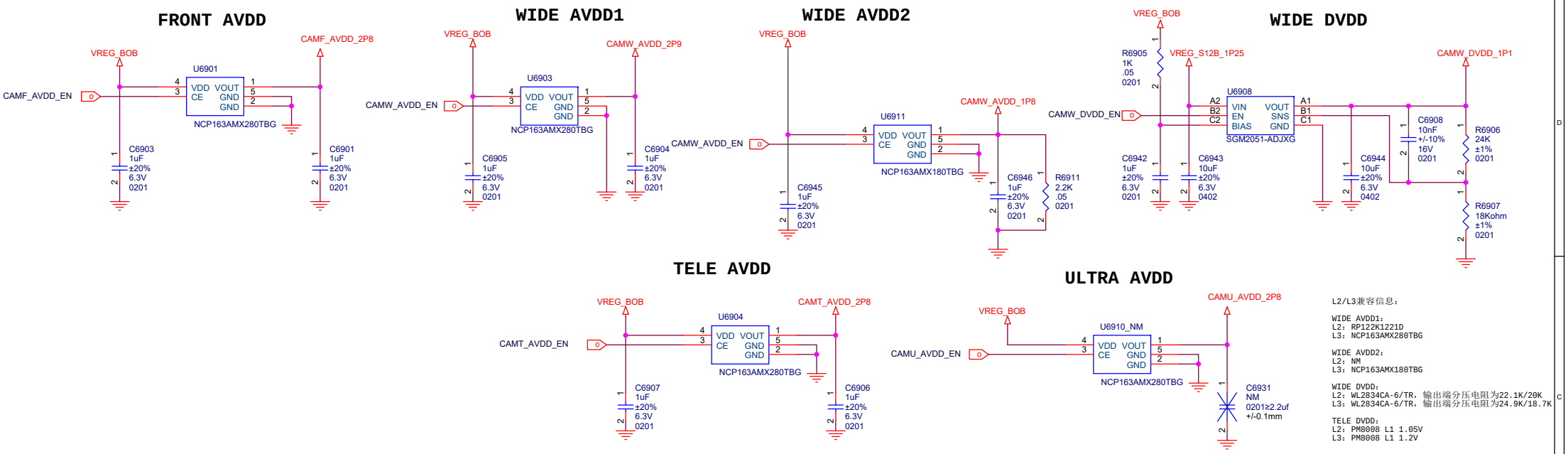

L2/L3兼容信息:

WIDE AVDD1:
L2: RP122K1221D
L3: NCP163AMX280TBG

WIDE AVDD2:
L2: NM
L3: NCP163AMX180TBG

WIDE DVDD:
L2: WL2834CA-6/TR, 输出端分压电阻为22.1K/20K
L3: WL2834CA-6/TR, 输出端分压电阻为24.9K/18.7K

TELE DVDD:
L2: PM8008 L1 1.05V
L3: PM8008 L1 1.2V

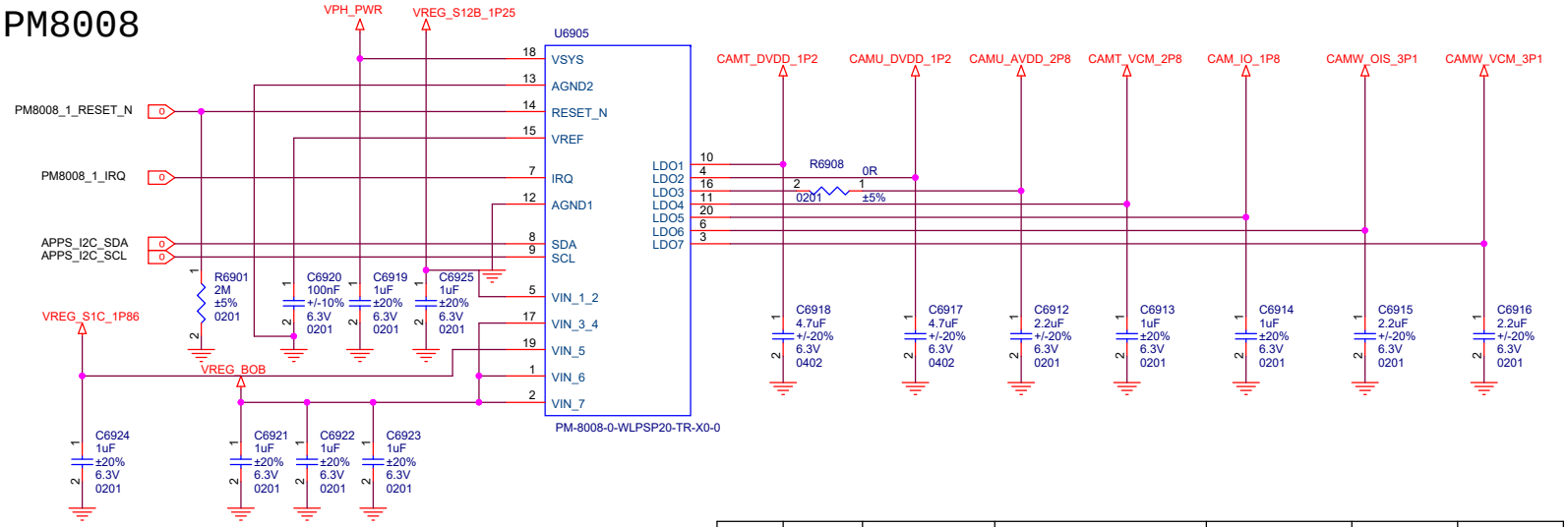

LDO	Irate (ma)	Default On Voltage(V)	Working Voltage Min	Normal	Max	Net Name	Capless	Cout(uf)
L1	1000	-- --	1.1	1.2	1.3	Tele DVDD	NO	4.7~20
L2	1000	-- --	1.14	1.2	1.26	Ultr DVDD	NO	4.7~20
L3	400	-- --	2.7	2.8	2.9	Ultr AVDD(兼容)	YES	1.0~50
L4	400	-- --	2.7	2.8	-- --	Tele VCM	YES	1.0~50
L5	400	-- --	1.7	1.8	1.9	Cam IOVDD	YES	1.0~50
L6	400	-- --	-- --	3.1	-- --	Wide OIS	YES	1.0~50
L7	400	-- --	-- --	3.1	-- --	Wide VCM	YES	1.0~50

Title	L2_MAIN	
Size A3	Document Number PM8008 & CAMERA LDOs	Rev P0
Date: Wednesday, October 20, 2021	Sheet	

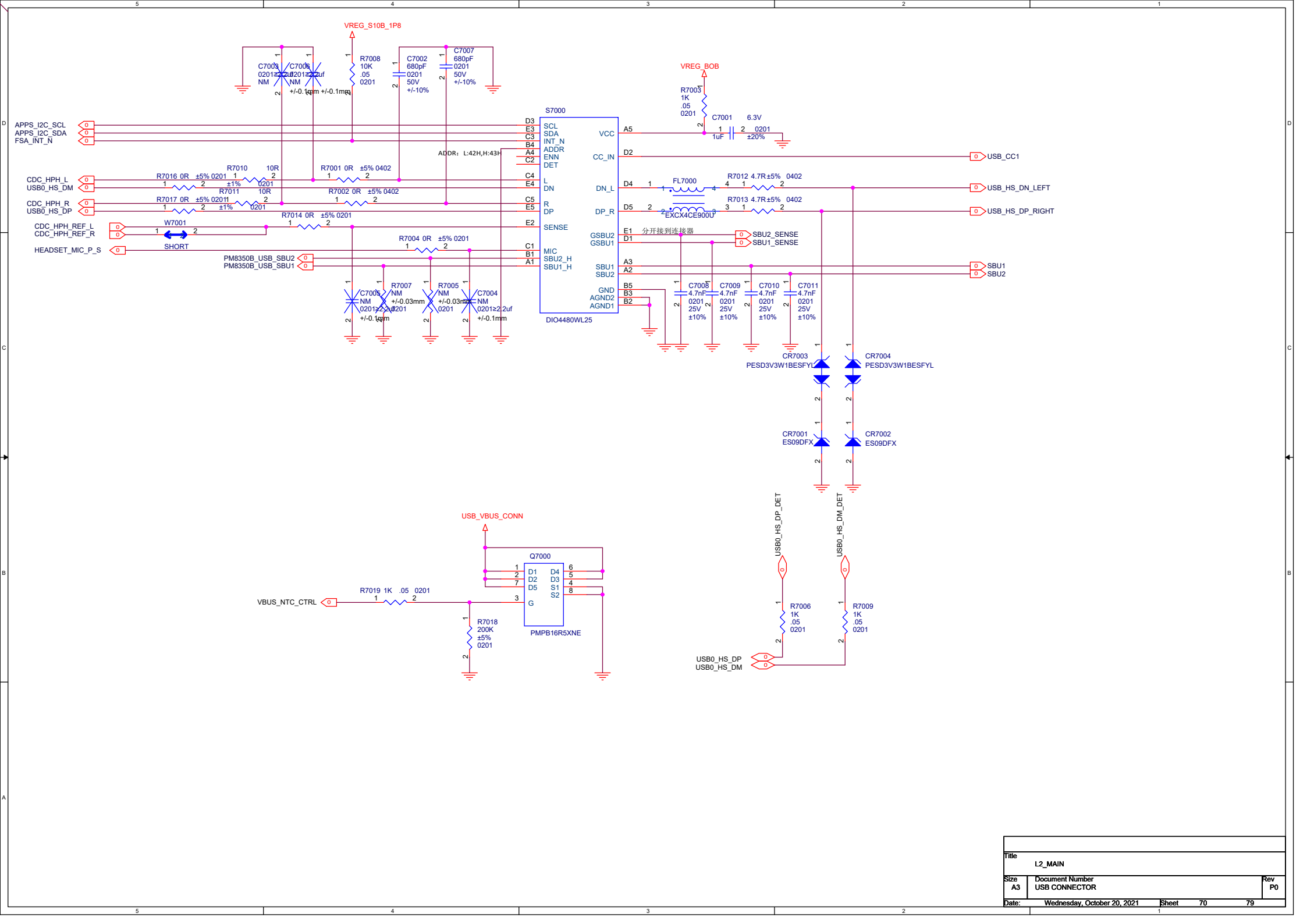

Title	L2_MAIN	
Size A3	Document Number USB CONNECTOR	Rev P0
Date: Wednesday, October 20, 2021	Sheet 70	79

Wireless-POWER

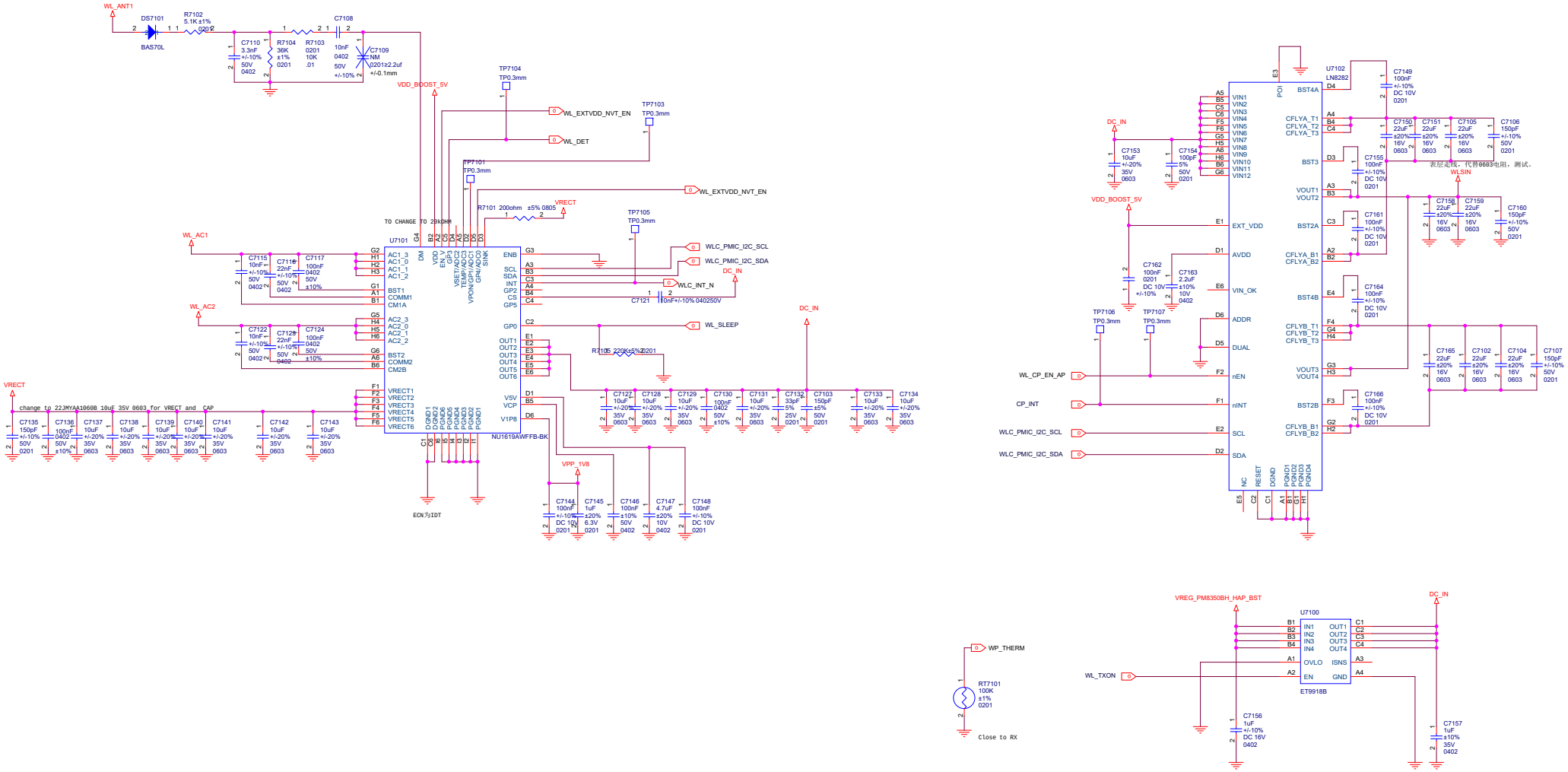

Title	L2_MAIN
Size A2	Document Number Reserved(for WL POWER)
Rev	P0
Date:	Wednesday, October 20, 2021
Sheet	

Title	L2_MAIN
Size A2	Document Number WL POWER
Rev	P0
Date:	Tuesday, October 19, 2021
Sheet	

屏蔽罩

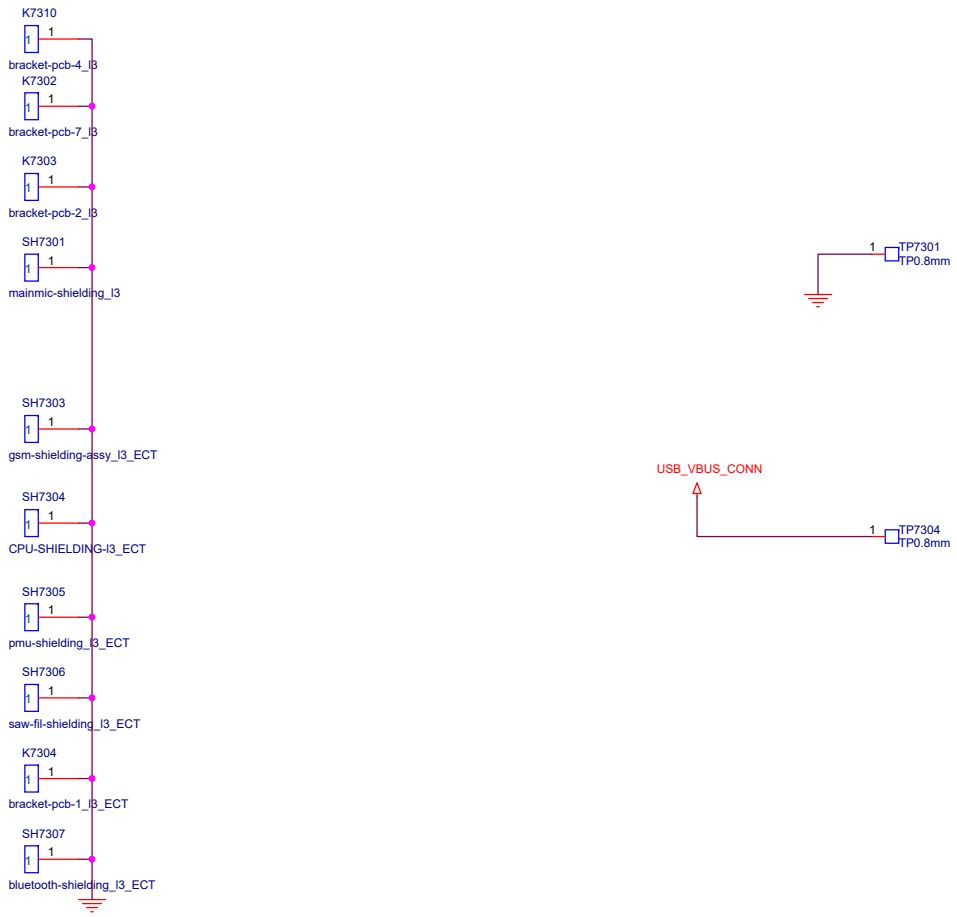

Title	L2_MAIN	
Size A3	Document Number TEST POINT	Rev P0
Date: Wednesday, October 20, 2021	Sheet 73	

Title	L2_MAIN
Size A3	Document Number ANT-diversity
Rev	P0
Date:	Tuesday, October 19, 2021
Sheet	

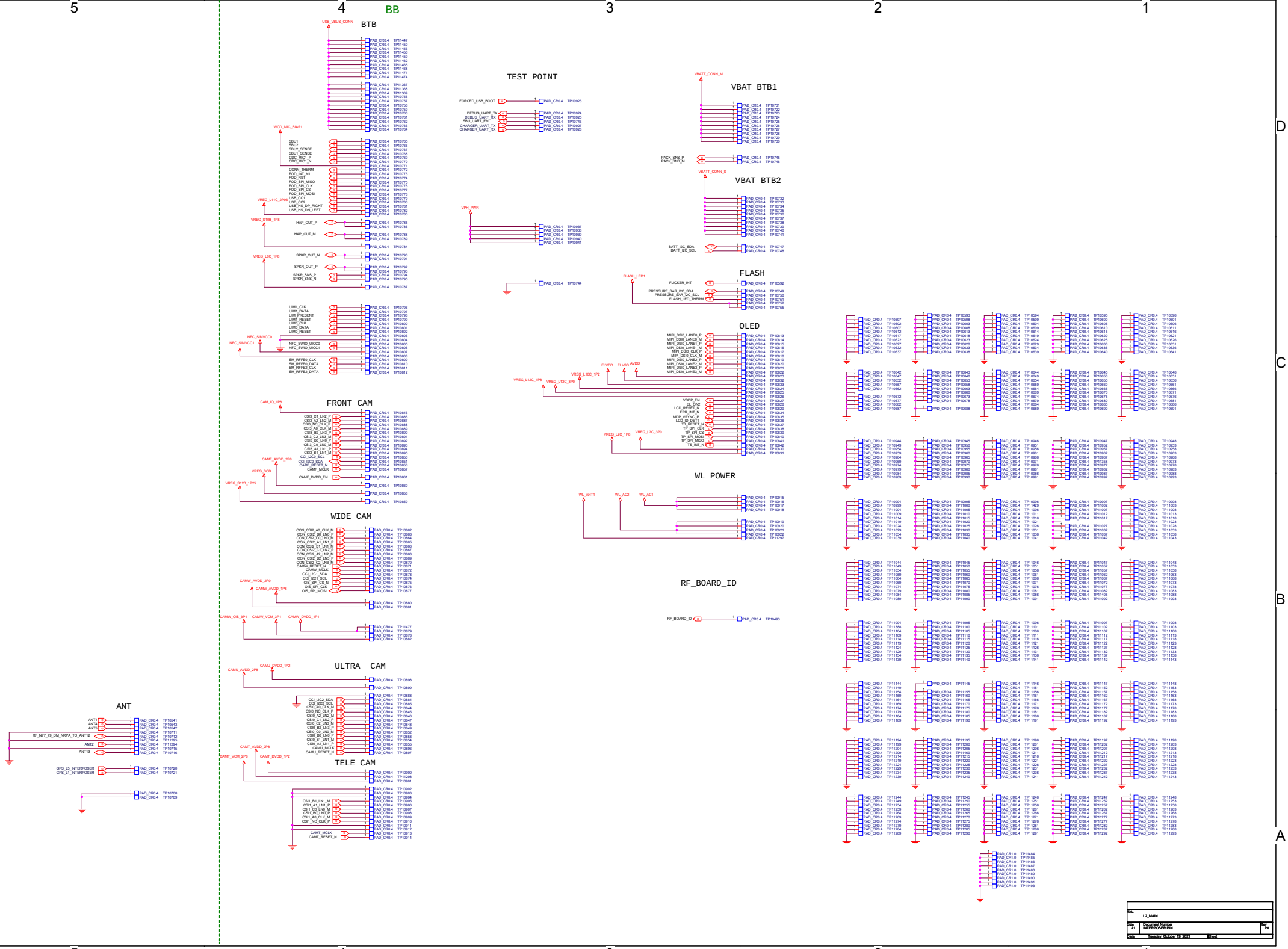
BB
BTB
TEST POINT
VBAT BTB1
VBAT BTB2
FLASH
OLED
FRONT CAM
WL POWER
WIDE CAM
RF_BOARD_ID
ULTRA CAM
ANT
TELE CAM
L2_MAIN
Size A1
Document Number INTERPOSER PIN
Rev P0
Date: Tuesday, October 19, 2021
Sheet

Title	L2_MAIN		
Size A	Document Number LGA PIN		Rev P0
Date: Tuesday, October 19, 2021		Sheet 76	79

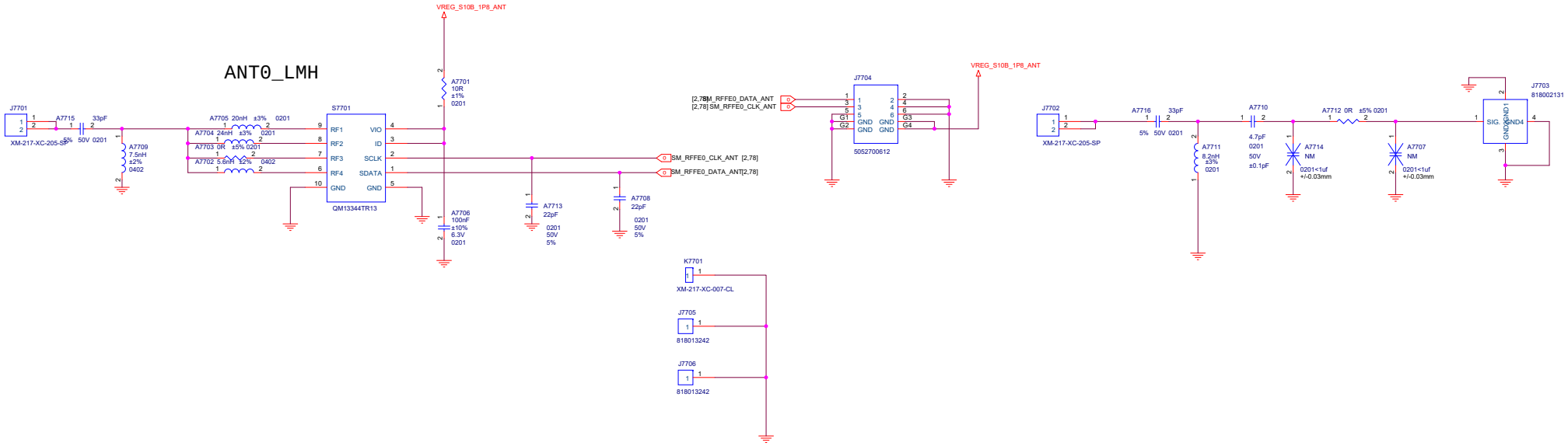

Title	L2_MAIN	
Size A2	Document Number LGA PIN	Rev P0
Date: Wednesday, October 20, 2021	Sheet	

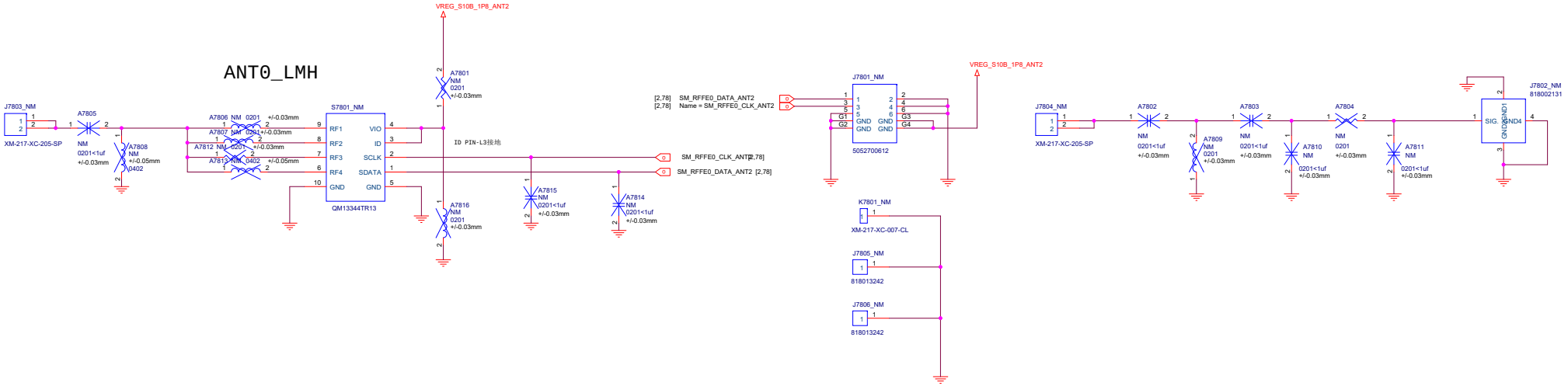

Title	F1 MAIN	
Size A2	Document Number Reserved(for PA)	Rev P0
Date: Wednesday, October 20, 2021	Sheet	